CITY OF NEW BERLIN
PLAN COMMISSION MEETING
Monday, January 10, 2022
VIA ZOOM
https://us02web.zoom.us/j/85912309075

The Plan Commission has satisfied the requirements as directed by the Common Council on June 22, 2021 and Ordinance No. 2651 to hold this meeting via electronic means. The full text of this ordinance and the minutes from the above mentioned meeting can be viewed at www.newberlin.org

Any comments that the public wishes to make may be communicated to the city via email at citizencomments@newberlin.org and will be forwarded to the Mayor and Plan Commissioners. Interested parties may also participate by:

- Downloading the ZOOM app located at https://zoom.us/ and utilize this unique ID to join: 859 1230 9075
- Following this direct link to the meeting: https://us02web.zoom.us/j/85912309075
- Find your local number: https://us02web.zoom.us/u/kTky0Cp5

AGENDA

PUBLIC HEARING(S)

(4) NJ CU-2102623 Jim Hart, New Berlin Utility Manager, on behalf of the New Berlin Utility Department -15451 W. Beloit Road (Tax Key #: 1254993001) (also referred to as 4950 S. Moorland Road (Tax Key #: 1254-982 in City files) - Conditional Use to reconstruct the Westridge Lift Station. (PUBLIC HEARING 6:00 PM)

PRIVILEGE OF THE FLOOR

CALL TO ORDER; PLEDGE OF ALLEGIANCE

ROLL CALL; DECLARATION OF QUORUM

APPROVAL OF MINUTES

December 6, 2021 Meeting Minutes

PLAN COMMISSION SECRETARY'S REPORT

CONTINUED BUSINESS

NEW BUSINESS

(6) KW SG-2102512 Lance McTrusty with Bauer Sign and Lighting – 13823 W. National Avenue – Sign waiver request for Minuteman Press.

(5) KW SG-2102518 Chris Hampton with Springfield Sign – 14855 W. National Avenue – Sign waiver request for Culvers.

(7) KW CU-2001518 Justin Bohler with ReVision Real Estate - 17400 W. National Avenue - Extension of approval for the Use, Site and Architecture for the construction of a new office/service commercial building.

(4) KW LD-2102520 Darin Frerichs with Berengaria Development, LLC - 5200 S. Moorland Road - 2-Lot Certified Survey Map.

(4) NJ CU-2102623 Jim Hart, New Berlin Utility Manager, on behalf of the New Berlin Utility Department -15451 W. Beloit Road (Tax Key #: 1254993001) (also referred to as 4950 S. Moorland Road (Tax Key #: 1254-982 in City files) - Conditional Use to reconstruct the Westridge Lift Station. (PUBLIC HEARING 6:00 PM)

ADJOURN

PLEASE NOTE:

- ✓ It is possible that action will be taken on any of the items on the agenda and that the agenda may be discussed in any order. It is also possible that members of and possible a quorum of other governmental bodies of the municipality may be in attendance at the above-stated meeting to gather information; no action will be taken by any governmental body at the above-stated meeting other than the governmental body specifically referred to above in this notice.
- ✓ Also, upon reasonable notice, efforts will be made to accommodate the needs of disabled individuals through appropriate aids and services. For additional information or to request this service, contact City Clerk Georgia Stanford (262) 786-8610.

STAFF REPORT
EXECUTIVE SUMMARY

APPLICANT/PROJECT:	**Jim Hart with the New Berlin Utility Department / Reconstruction of the Westridge Lift Station**
LOCATION:	**15451 W. Beloit Road (Tax Key #: 1254.993.001) (also referred to as 4950 S. Moorland Road (Tax Key #: 1254.982) in City files)**
REQUEST:	**Conditional Use Permit for the New Berlin Utility Department to reconstruct the Westridge Lift Station, located at 15451 W. Beloit Road.**
D.R.C. RECOMMENDATION:	**Approval of the Conditional Use Permit for the New Berlin Utility Department to reconstruct the Westridge Lift Station, located at 15451 W. Beloit Road, subject to the application, plans on file and the following conditions of approval:**

1. **Planning:**
    a. **Architecture Review Committee approval required prior to issuance of the Zoning Permit.**
    b. **Plan of operation shall be consistent with submitted plans on file.**
        i. **Applicant is proposing to reconstruct the existing lift station.**
        ii. **Final plans shall be reviewed and shall meet the O-2 Zoning District setbacks.**
    c. **Applicant shall correct all drafting errors and requested changes identified by City Staff.**
    d. **Applicant shall inform the Holiday Inn Express of the construction.**
    e. **Applicant shall coordinate any future easement work with the City Attorney.**
2. **Building Inspection:**
    a. **Building plans shall be signed and stamped by a licensed architect or professional engineer per the Wisconsin Enrolled Commercial Building Code (Comm. 361.31).**
    b. **The State of Wisconsin Commerce review can be done locally as per (Comm. 361.60) if under cubic foot rule per Wi stat 101.12(3) (b) and (g).**
    c. **Apply and obtain appropriate building, HVAC, electric, plumbing and fire permits from the City of New Berlin Building Inspection Division.**
    d. **The building shall be fully accessible from the parking lot to the interior elements Comm. 63.1101 and ICC/ANSI A117.1).**
3. **Engineering:**
    a. **Permission is required if construction staging is needed from the WisDOT Park and Ride lot.**
    b. **Plan does not show any building lighting for evening access or security purposes.**
    c. **Any lighting shall meet Zoning Code Section 275-60.I.**

DETAILS IN ATTACHED STAFF REPORT

CITY OF NEW BERLIN
DEPARTMENT OF COMMUNITY DEVELOPMENT
PLAN COMMISSION STAFF REPORT

Meeting of January 10, 2022

Jim Hart / City of New Berlin Utility Department
15451 S. Beloit Road

DATE STAFF REPORT: 12/13/2021

APPLICANT / OWNER(S): Jim Hart / City of New Berlin Utility Department

REQUEST / DESCRIPTION OF PROJECT: Conditional Use Permit for the New Berlin Utility Department to reconstruct the Westridge Lift Station, located at 15451 W. Beloit Road.

DATE OF APPLICATION / DATE FILED WITH CITY CLERK: 12/10/2021

DATE OF COMPLETENESS DETERMINATION: 12/10/2021
Application Check List Enclosed: N

PRE-APPLICATION CONFERENCE HELD: Yes
Dates of Meetings: 12/13/2021 and numerous emails / phone calls.
Site Visit: 12/20/2021

CONCEPTUAL PLAN: N/A

SIZE OF DEVELOPMENT / PARCEL(S):
Parcel Size: 4.89 Acres
Development Size: ~672 Sq. Ft.

CURRENT ZONING: O-2 (Office Park Development District)

CURRENT LAND USE: Holiday Inn Express and Westridge Lift Station

PROPOSED ZONING: N/A

PROPOSED LAND USE: Reconstruct the Westridge Lift Station

PROPOSED LOT SIZE (S): N/A

PROPOSED DENSITY: N/A

ADJACENT ZONING AND LAND USE:

North:	Zoning: B-1	Land Use: Commercial (Multi-tenant Commercial Buildings)
South:	Zoning: M-1/C-2	Land Use: I-43, Water Utility Well #10 & La Quinta Hotel
East:	Zoning: M-1/C-2	Land Use: I-43, Water Utility Well #10 & La Quinta Hotel
West:	Zoning: B-4	Land Use: Commercial (Park & Ride)

CONFORMANCE WITH COMPREHENSIVE PLAN AND MUNICIPAL CODE: Yes

Chapter 18: Neighborhood "H": Westridge & Moorland Road: Yes, this submittal meets the intent of this Chapter.

Planning Context / Vision / Development Policies:

Vision:

- *Westridge/Towne Corporate Business Park should be expanded as a major economic center for the City. The Business Park should continue to set an example of high standards in architecture, site planning, and sustainable practices. Primary uses should promote light manufacturing and office complexes. Hotels, clinics, entertainment (i.e. restaurants, shopping center, and cinemas), and retail should serve as supporting uses.*
- *The vision for the South Moorland Road Corridor includes the following elements that have been incorporated into the development of the plan:*
    - ✓ *A business community that focuses on sustainable site and building design.*
    - ✓ *Emphasis on preservation of significant environmental features such as: wetlands, woodlands, tree rows, floodplain and environmental corridors.*
    - ✓ *Focus on green infrastructure and creative storm water management elements.*
    - ✓ *A system of meaningful pedestrian connections to create a walkable and connected community.*
    - ✓ *Focus on sound planning and architecture practices.*
    - ✓ *Layout that includes a mix of retail, commercial, office and light manufacturing within the Business Park/Industrial area.*
    - ✓ *Allow for flexible site design for both residential and nonresidential development by creating Zoning Code standards that promote creativity and sustainability.*
    - ✓ *Require significant buffers between contrasting uses and main thoroughfares.*

Development Policies:

- *Emphasize mixed use developments with light industrial and office as the dominant land uses. Supporting hospitality related uses (i.e., hotels and table service restaurants) should complement the primary uses.*
- *Use low-intensity office or neighborhood-oriented retail as a buffer between the industrial areas and the residential areas to the north and west.*
- *Require traffic impact studies to be submitted for new construction as indicated in the City Zoning Code requirements. The City should ensure that impact studies include consideration of the surrounding area at full build-out.*
- *Require coordinated, pre-planned concepts/development proposals to ensure a cohesive and coordinated development pattern. Developments must take into consideration how adjacent parcels would be developed.*
- *Development proposals shall include appropriate utility easements and/or roadway reservations or dedications to ensure public infrastructure (utility or roadway) extensions/connections and a coordinated development pattern are achieved.*
- *Any future development requiring coordinated access and/or utility extensions in this area may require the applicant to submit a surety instrument to the City to cover future public improvements and cost contributions.*

Land Use:

- *Future Land Use Map: Business Park Industrial*

ZONING CODE (CHAPTER 275): Yes, this request is consistent with the current Zoning District outlined in Section 275-35B(2) of the Zoning Code.

DEVELOPMENT CODE (CHAPTER 235): N/A

PUBLIC HEARING REQUIRED: Yes, required for a Conditional Use. The Public Hearing will be held on January 10, 2022.

CONDITIONAL USE REQUIRED: Yes

USE / SITE /ARCHITECTURAL REVIEW:
Conditional Use Approval Required: Yes
Site Plan Required: Yes
Architectural Review Required: Yes, ARC will review the request on January 10, 2022.

PROPOSED ARCHITECTURE: The applicant is proposing to reconstruct the lift station. Building materials are listed in the plan and picture of similar lift station is included. The ARC will review the architecture at the January 10, 2022 meeting.

UNIQUE SITE CHARACTERISTICS:
Environmental Corridor: Yes, around the pond, but not in the area of the proposed lift station.
Wetlands on Property: Yes, there are wetlands around the pond, but not in the area of the proposed lift station.
Conservancy Districts (C-1, C-2): No
NRCS Map Classification: Not Inventoried.
Floodplain: No
Topography / Geologic: Site slopes from the west to the east towards the pond.

ALTERNATIVE TRANSPORTATION PLAN: No improvements identified.

PARK & OPEN SPACE PLAN: No improvements identified.

NATURAL RESOURCES PROTECTION:
Limits of Disturbance (LOD): Shown on plans.
Woodland, Tree, and Vegetation Protection: N/A
Wildlife Habitat Protection: N/A
Wildlife Management Plan: N/A

ENVIRONMENTAL IMPACT: No impact.

STORM WATER MANAGEMENT / DRAINAGE PLAN: Applicant is required to adhere to all City of New Berlin codes, ordinances and plans regarding storm water conveyance and maintenance and/or as identified by the Department of Community Development.

SANITARY SEWER PROVISION:
Within Current Sewer Service Area: Yes
Sewershed Capacity Available: N/A
Adequate Linkage: N/A
Onsite System Required: No

WATER USAGE CALCULATION: N/A

TRAFFIC IMPACT: No increase.

SCHOOL DISTRICT IMPACT: No impact.

PREVIOUS ACTION:
Original lift station constructed with the Westridge Business Park Development.

CONSISTENCY WITH PREVIOUS ACTION: Yes

FINDINGS:

1. Architecture Review Committee approval required prior to issuance of the Zoning Permit.
2. The property is zoned O-2 (Business Park Development District).
3. This use would be defined as a Utility, which requires a Conditional Use review.
4. There is a water main and storm sewer easement document # 2801543 on file.
5. CSM # 8282 identifies a permanent utility easement, a lift station easement and an ingress-egress easement.
6. Per Zoning Code Section 275-71 Utility is defined as - *The public and private facilities, that are not of a regional nature, such as water wells, sanitary sewers, water mains, water and sewage pumping stations, water storage tanks, water purification facilities, power and communication transmission lines, electrical power stations and substations, static transformer stations, telephone and telegraph exchanges and gas regulation stations, wastewater treatment plants, municipal incinerators and storage yards. Telecommunication facilities are not to be considered utilities. See also § 275-40.*
7. Per Section 275-27C. Approval criteria: *"The Plan Commission of the City of New Berlin will grant approval of conditional use permits only if it finds that the proposed use complies with all relevant regulations set forth in this chapter, including, but not limited to, § 275-41, Use-specific regulations, and Article VIII, General Development Regulations. Per § 66.1001(2m)(b), Wis. Stats., a conditional use does not need to be consistent with the City's Comprehensive Plan."*

(1) Approval of a conditional use. Recommendations and decisions on conditional uses should be based on consideration of the following criteria:

(a) Whether the proposed use corrects an error or meets the challenge of some changing condition, trend, or fact;

(b) Whether the proposed use is consistent with the health, safety, or general welfare of the general public;

(c) Whether the proposed use will protect the natural environment, including, but not limited to air, water, storm water management, wildlife, and vegetation.

(2) Changes to the use. In acting on a conditional use, the Plan Commission/CDA shall consider the stated purpose of the proposed use and shall approve the petition only if it finds that the applicant has provided substantial evidence as that term is defined in Wis. Stats. § 62.23(7) that the use will meet the following criteria for approval:

(a) Adequate public facilities and services (including sewage and waste disposal, water, gas, electricity, schools, police and fire protection, and roads and transportation, as applicable) will be available to serve the subject property while maintaining adequate levels of service to existing development;
<u>Yes, the proposed request is compliant.</u>

(b) Provision of public facilities to accommodate development will not place an unreasonable burden on the ability of the City to provide them;
<u>Yes, the proposed request is compliant.</u>

(c) The proposed development has taken into account impacts on surrounding properties or the natural environment, including traffic, air, water, noise, stormwater management, soils, wildlife, and vegetation;
<u>Yes, the proposed request is compliant.</u>

(d) The land is suitable for development and will not cause unreasonable soil erosion or have an unreasonable adverse effect on rare or irreplaceable natural areas; and
<u>Yes, the proposed request is compliant.</u>

(e) The proposed use will not be used to legitimize a nonconforming use or structure
Yes, the proposed request is compliant. The lift station requires upgrades.

D.R.C RECOMMENDATION: Approval of the Conditional Use Permit for the New Berlin Utility Department to reconstruct the Westridge Lift Station, located at 15451 W. Beloit Road, subject to the application, plans on file and the following conditions of approval: **SEE EXECUTIVE SUMMARY.**

ATTACHMENTS:
Location Map
Waiver Letter
Plans

City of New Berlin
Community Development

CU-2102623
Westridge Lift Station
15451 W. Beloit Road (Tax Key #: 1254993001)

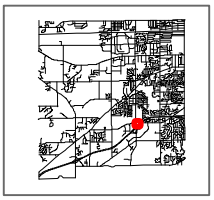

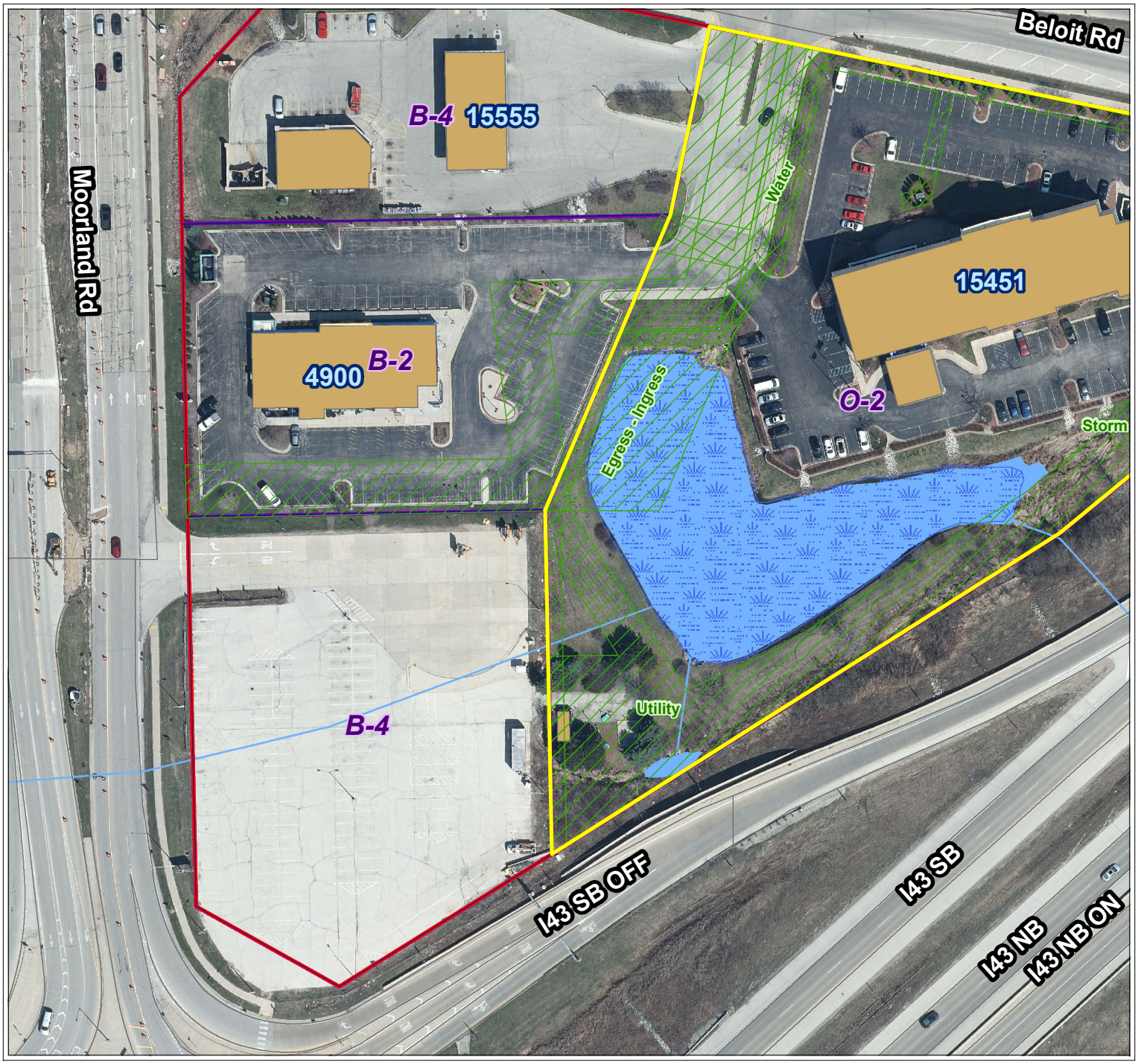

City of New Berlin
Department of Community Development
3805 S Casper Dr.
New Berlin WI 53151
(262) 797-2445
www.newberlin.org

Legend

- Parcels
- Road Right-of-Way

Floodplain DFIRM (FEMA 2014)

Flood Zone

- FEMA DFIRM - Zone A
- FEMA DFIRM - Zone AE
- FEMA DFIRM - 0.2% Annual Chance
- Zoning Boundaries

Zoning Wetland Registration

Wetland Registration Type

- Registered Wetland
- Outside Wetland

Environmental Corridor

Corridor Type

- Isolated Natural Resource Area
- Primary Environmental Corridor
- Secondary Environmental Corridor

Sewer Service Area (MMSD)

Sewershed

- Current
- Ultimate

N

0 40 80 Feet

The information and depictions herein have been produced using data available through photogrametric means by the City of New Berlin. The informations and depictions herein are for informational purposes and the City of New Berlin specifically disclaims accuracy in this reproduction and specifically admonishes and advises that any and all depiction, measurements, distances depicted herein and as to which specific or precise accuracy is required should be determined by procurement of certified maps, surveys, plats, Flood Insurance Studies, or other official means.

Map Printed: 12/16/2021 4:05:03 PM

From: Hart, Jim
To: Kessler, Greg; Jones, Nikki; Diane L. Thoune
Cc: Welch, Mark; Graser, Joe
Subject: Administrative Adjustment
Date: Wednesday, December 15, 2021 8:51:24 AM

Good Morning,

We are requesting an Administrative Adjustment for a 5' variance for a setback of 20' from the DOT property line on the west side of the new proposed lift station.

The reasons are listed below:

1. We need a straight shot out of the wet well into the force main instead of multiple bends.
2. During construction we still need to operate the existing lift station as the new lift station is built and installed. If we have to move the new station over we will have to put bends in to go around the existing Dry well (Elevator Shaft).
3. The more bends in the piping decrease the efficiency of the pumps. Thus we may need to purchase a higher horse power pumps costing a significant amount of money.
4. By moving the building to the east 5' instead of the 10' it will be easier to connect to the new piping to the existing force main thus saving money during the installation.

Please let me know if you need any further information.

Thank you,

Jim Hart
Utility Manager
City of New Berlin
3805 S Casper Drive
New Berlin, WI 53151
262.786.7086
www.newberlin.org

CITY OF NEW BERLIN

WESTRIDGE LIFT STATION REHABILITATION

WAUKESHA COUNTY, WISCONSIN

811 Know what's below. Call before you dig.

DIGGERS HOTLINE
Toll Free (800) 242-8511
Milwaukee Area (414) 259-1181
Hearing Impaired TDD (800) 542-2289
www.DiggersHotline.com
WIS. STATUTE 182.0175 (1974) REQUIRES MIN. OF 3 WORK DAYS NOTICE BEFORE YOU EXCAVATE.

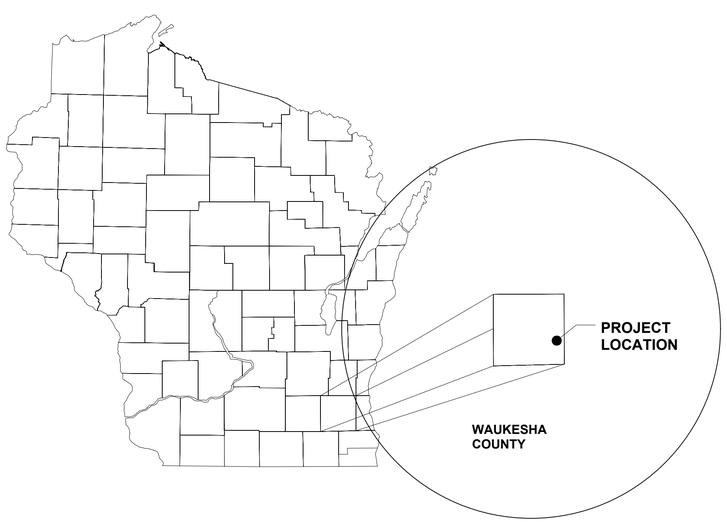

GENERAL LOCATION MAP

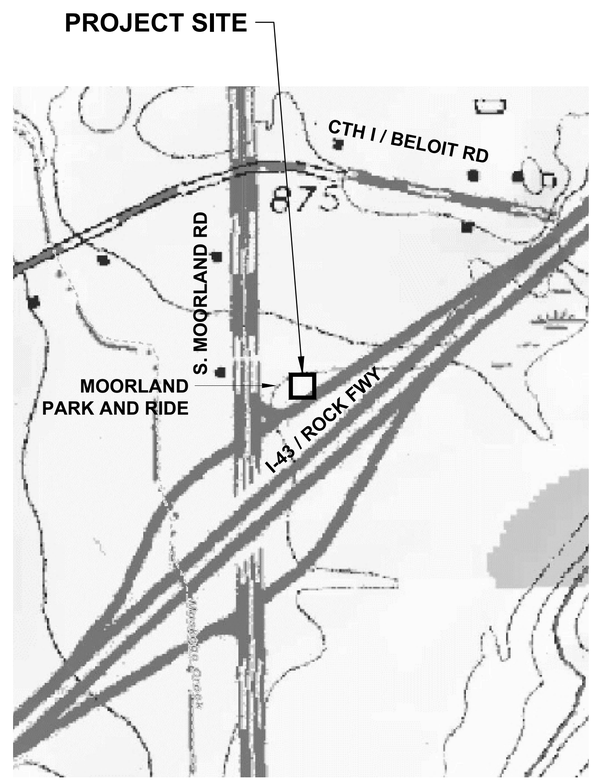

PROJECT LOCATION MAP

PLAN SHEET INDEX

DWG NO.	SHEET NO.	DRAWING TITLE
GENERAL INFORMATION		
G-001	1	Cover
G-002	2	General Notes
CIVIL		
C-101	3	Existing Site Conditions
C-102	4	Site Demolition Plan
C-103	5	Site Plan
C-104	6	Site Grading and Erosion Control Plan
C-105	7	Site Utilities Plan
C-501	8	Erosion Control Details
C-502	9	Construction Details (1 of 2)
C-503	10	Construction Details (2 of 2)
STRUCTURAL		
S-101	11	Structural Building Plan
S-102	12	Structural Elevation Plan
S-103	13	Structural Section Plan
S-201	14	Wet Well Cover Structural Details
S-501	15	Structural Details
MECHANICAL		
M-101	16	Existing Lift Station and Wet Well Sections
M-102	17	Lift Station Piping Plan
M-103	18	Lift Station and Wet Well Sections
ELECTRICAL		
E-001	19	Electrical General Notes, Symbols, and Abbreviations
E-101	20	Electrical Site Demolition Plan
E-102	21	Electrical Site Plan
E-103	22	Lift Station Lighting, Power, and Systems Plan
E-501	23	Lift Station Electrical Details
E-601	24	Demolition One-Line Diagram
E-602	25	One-Line Diagram
E-603	26	Electrical Schedules (1 of 3)
E-604	27	Electrical Schedules (2 of 3)
E-605	28	Electrical Schedules (3 of 3)
E-606	29	Interconnect Diagram
HVAC		
H-103	30	Lift Station Heating, Ventilation and Cooling Plan
H-501	31	HVAC Schedules and Details

ClarkDietz
500 N. 3RD STREET
SUITE 200
WAUSAU, WI 54403
PHONE : 715.845.1333 www.clarkdietz.com

90% SUBMITTAL
NOT FOR CONSTRUCTION

PROJECT TITLE
CITY OF NEW BERLIN
WESTRIDGE LIFT STATION REHABILITATION
WAUKESHA COUNTY, WI

DESIGNED BY: DLT
DRAWN BY: IWD
CHECKED BY: TSW
DATE CHECKED: 11/23/21

DATE	REVISION
11/29/21	90% SET
09/30/21	50% SET

DRAWING TITLE
COVER

PROJECT No.
N0430020

DRAWING No.
G-001

DWG 1 OF 31 DWGS

NOTE: DIMENSIONAL DATA IS NOT TO BE OBTAINED BY SCALING ANY PORTION OF THIS DRAWING.

PLOT DATE 11/30/2021 9:43 AM
P:\N0430020_NEW BERLIN - WESTRIDGE LIFT STATION REHA\DESIGN\CAD\SHEETS\01-GENERAL\G-COVER.DWG ISAAC W. DOLAN SAVE TIME 11/29/2021 1:00:10 PM

UTILITIES

DIGGER'S HOTLINE
800-242-8544 (TOLL FREE)

EVERSTREAM - COMM
262-446-9821 (USIC)

AT&T DIST. - COMM
262-446-9821 (USIC)

TIME WARNER CABLE - COMM
262-446-9821 (USIC)

WE ENERGIES - ELECTRIC & GAS
262-446-9821 (USIC)
262-574-3064 (OFFICE)
JOHN ANDERSON

NEW BERLIN UTILITIES
4000 S. CASPER DRIVE
NEW BERLIN, WI 53151
262-786-7086
JOE GRASER

WISCONSIN DOT SE REGION
141 NW BARSTOW STREET
WAUKESHA, WI 53187
262-548-5902

811 Know what's below. Call before you dig.

ABBREVIATION

AGG	AGGREGATE
APP	APPROXIMATE
BC, BOC, B/C	BACK OF CURB
CL, C/L	CENTER LINE
EP, EOP, E/P	EDGE OF PAVEMENT
FL, F/L	FLOW LINE
R/L	REFERENCE LINE
RP	RADIUS POINT
RW, R/W, ROW	RIGHT-OF-WAY
NML	NORMAL
EB	EAST BOUND
WB	WEST BOUND
SPCL	SPECIAL

SURVEY NOTES

- SURVEY WAS PERFORMED USING NAD83 SPC WI SOUTH, VERTICAL NAVD88.
- THE EXISTING UTILITIES WERE NOT MARKED BY DIGGER'S HOTLINE.
- RIGHT-OF-WAY AND LOT LINES ARE APPROXIMATE AND WERE DRAWN USING CSM BEARINGS AND DISTANCES FROM SECTION CORNERS.
- A BOUNDARY SURVEY WAS NOT PERFORMED.

GENERAL NOTES

1. THE CONTRACTOR SHALL NOTIFY THE CITY, THE UTILITY SUPERINTENDENT, AND ALL LOCAL UTILITY COMPANIES A MINIMUM OF 48 HOURS IN ADVANCE OF PERFORMING ANY WORK. RE-NOTIFICATION SHALL BE REQUIRED IF ANY PHASE OF WORK IS SUSPENDED FOR MORE THAN TWO (2) DAYS.

DIGGER'S HOTLINE	800-242-8511 OR 811
CLARK DIETZ, INC., DIANE THOUNE	715-845-1333 ext. 2527
NEW BERLIN UTILITIES	262-786-7086
WE ENERGIES	262-574-3064

2. NOT ALL OF THE UTILITY LINES, WHETHER ABOVE OR BELOW GROUND, HAVE BEEN SHOWN ON THE DRAWINGS. THE LOCATIONS OF EXISTING UTILITIES AS SHOWN HAVE BEEN DETERMINED FROM TOPOGRAPHICAL SURVEY AND UTILITY AS-BUILTS FOR THE EXISTING FACILITIES AND ARE GIVEN FOR THE CONVENIENCE OF THE CONTRACTOR. THE CONTRACTOR MUST REALIZE THAT THE ACTUAL LOCATIONS OF THE UTILITIES SHOWN ON THE DRAWING MAY BE DIFFERENT FROM THE LOCATIONS INDICATED AND ASSUME RESPONSIBILITY FOR ALL PIPING/UTILITIES.
3. THE CONTRACTOR IS RESPONSIBLE FOR DEBRIS REMOVAL ASSOCIATED WITH THIS PROJECT AND LEGAL DISPOSAL OF ALL MATERIALS AND EQUIPMENT REMOVED DURING DEMOLITION AND DURING THE CONSTRUCTION AND INSTALLATION OF THE NEW SYSTEMS AND EQUIPMENT.
4. PRIOR TO COMMENCING WORK, THE CONTRACTOR SHALL HAVE IN THEIR POSSESSION ALL REQUIRED PERMITS FOR THE CONSTRUCTION OF THIS PROJECT AS NECESSARY. SEE SPECIFICATIONS FOR PERMIT REQUIREMENTS.
5. INFORMATION ON DETAIL DRAWINGS TAKES PRIORITY OVER ALL GENERAL DRAWINGS AND SCHEDULES. CONFLICTS SHALL BE RESOLVED ACCORDINGLY.
6. IT IS THE CONTRACTOR'S RESPONSIBILITY TO RESTORE ALL FEATURES DISTURBED DURING CONSTRUCTION TO THEIR ORIGINAL STATE, OR BETTER. ALL RESTORATION WORK REQUIRED BEYOND THE SCOPE OF THE PLANS AND SPECIFICATIONS SHALL BE DONE AT THE CONTRACTOR'S EXPENSE UNLESS WORK WAS DONE AT THE DIRECTION OF THE OWNER OR ENGINEER AND COMPENSATION WAS AGREED UPON PRIOR TO EXECUTION OF WORK.
7. THE CONTRACTOR SHALL PRESERVE AND PROTECT PROPERTY MARKERS, SECTION CORNERS, SURVEY MARKS AND VILLAGE BENCH MARKS, SUCH AS STONES, PIPES, OR OTHER MONUMENTS ENCOUNTERED. IF THE CONTRACTOR MUST RELOCATE THE PROPERTY MARKERS OR MONUMENTS, THEIR LOCATION SHALL BE REFERENCED BY A REGISTERED LAND SURVEYOR AND THE OWNER NOTIFIED BEFORE MOVING. ALL PROPERTY MARKERS AND MONUMENTS RELOCATED DURING CONSTRUCTION SHALL BE RE-ESTABLISHED BY A REGISTERED LAND SURVEYOR AT THE CONTRACTOR'S EXPENSE.
8. THE CONTRACTOR IS SOLELY AND COMPLETELY RESPONSIBLE FOR JOB SITE CONDITIONS DURING THE COURSE OF CONSTRUCTION OF THIS PROJECT, INCLUDING EROSION CONTROL AND THE SAFETY OF ALL PERSONS AND PROPERTY; THIS REQUIREMENT SHALL APPLY CONTINUOUSLY AND NOT BE LIMITED TO NORMAL WORKING HOURS, AND THE CONTRACTOR SHALL DEFEND, INDEMNIFY AND HOLD THE OWNER AND THE ENGINEER HARMLESS FROM ALL LIABILITY, REAL, OR ALLEGED, IN CONNECTION WITH THE PERFORMANCE OF WORK ON THE PROJECT EXCEPTING FOR LIABILITY ARISING FROM THE SOLE NEGLIGENCE OF THE OWNER OR THE ENGINEER.
9. WHEN CONNECTIONS ARE TO BE MADE TO EXISTING PIPING AND STRUCTURES, THE LOCATION AND ELEVATION OF THE EXISTING PIPING AND OTHER UTILITIES SHALL BE FIELD VERIFIED AND NOTIFICATION GIVEN TO THE OWNER IF THE EXISTING PIPING IS FOUND TO BE DIFFERENT THAN THAT SHOWN ON THE DRAWINGS.
10. EXISTING WESTRIDGE LIFT STATION PLANS AND SECTIONS TAKEN FROM "WESTRIDGE SEWAGE PUMP STATION" PLANS BY RUEKERT MIELKE, DATED SEPTEMBER 1994. CONTRACTOR SHALL VERIFY DIMENSIONS IN FIELD.
11. CONTRACTOR IS RESPONSIBLE FOR PROVIDING ALL NECESSARY SEWAGE BYPASS PUMPING AND/OR WASTE HAULING DURING CONSTRUCTION. PROVIDE AND INSTALL MANHOLE PLUGS, HOSE, PUMPS, ETC. AS NECESSARY. BYPASS PLAN SHALL BE SUBMITTED TO THE OWNER AND ENGINEER FOR APPROVAL A MINIMUM OF 48 HOURS PRIOR TO BEGINNING BYPASS OPERATIONS. CONTRACTOR MAY UTILIZE THE CITY OF NEW BERLIN'S EXISTING FORCE MAIN BYPASS CONNECTION LOCATED ON THE LIFT STATION SITE. CONTRACTOR SHALL COORDINATE USE OF THE CITY'S EXISTING FACILITIES WITH THE OWNER AND ENGINEER. THE COST OF BYPASS OPERATIONS SHALL BE CONSIDERED INCIDENTAL TO THE CONTRACT.
12. SEE WETLAND MAP IN APPENDIX. SITE IS ADJACENT TO WETLANDS. NO CONSTRUCTION ACTIVITIES OR MATERIAL STORAGE SHALL IMPACT WETLANDS.
13. SITE ACCESS IS AVAILABLE THROUGH THE ADJACENT WISCONSIN DEPARTMENT OF TRANSPORTATION PARK AND RIDE LOT.
14. CONTRACTOR MAY PARK EQUIPMENT IN ADJACENT PARK AND RIDE LOT. DO NOT BLOCK DRIVEWAY OR TRAFFIC FLOW. DO NOT STORE MATERIALS IN LOT. CONTRACTOR IS RESPONSIBLE FOR ANY DAMAGE TO THIS LOT.
15. ALL SHEET NOTE IDENTIFIERS (LETTERS AND NUMBERS) ARE SPECIFIC TO THE SHEET THE NOTES ARE PLACED AND DO NOT CORRELATE WITH NOTE IDENTIFIERS ON OTHER SHEETS.
16. PROVIDE DEWATERING AS NECESSARY TO COMPLETE THE WORK SHOWN IN THE PLAN. SHEET PILING AND/OR SHORING MAY BE REQUIRED. ALL DEWATERING-RELATED ACTIVITIES (E.G., PERMITTING, WELLS, TREATMENT, ETC.) SHALL BE CONSIDERED INCIDENTAL TO THE CONTRACT.
17. CONTRACTOR SHALL BE PREQUALIFIED BY THE CITY OF NEW BERLIN. SEE PROJECT MANUAL FOR ADDITIONAL INFORMATION.

SYMBOL LEGEND

CABLE TV PEDESTAL
SATELLITE DISH
TELEPHONE BOX
TELEPHONE BOOTH
TELEPHONE POLE
TELEPHONE MANHOLE
TELEPHONE PEDESTAL
TELEPHONE PEDESTAL PAY PHONE
FIRE HYDRANT
FLUSH OUT HYDRANT
WATER SPIGOT
WATER SERVICE BOX
WELL
WATER METER
WATER MANHOLE
WATER VALVE
ELECTRIC BOX
ELECTRIC METER
ELECTRIC MANHOLE
ELECTRIC PEDESTAL
FLOOD LIGHT
HANDHOLE
ORNAMENTAL STREET LIGHT
PARKING LOT LIGHT DOUBLE
PARKING LOT LIGHT SINGLE
POWER POLE
POWER POLE WITH LIGHT
POWER POLE W/TRANSFORMER
POWER POLE W/TRANSFORMER & LIGHT
STREET LIGHT
TRANSFORMER BOX
YARD LIGHT
SPRINKLER CONTROL BOX
SPRINKLER HEAD
GAS SERVICE BOX
GAS METER
GAS REGULATOR
GAS VALVE
GAS VENT PIPE
REFLECTIVE PAVEMENT MARKER 1 WAY
REFLECTIVE PAVEMENT MARKER 2 WAY
RAILROAD FLASHING SIGNAL
RAILROAD CROSSING GATE
RAILROAD CROSSBUCK
CLEANOUT
LIFT STATION
SANITARY MANHOLE
SEPTIC TANK
SEPTIC TANK VENT
END SECTION METAL
CATCH BASIN
CATCH BASIN SQUARE
DOWNSPOUT
END SECTION CONCRETE
INLET AT CURB
STORM MANHOLE
BENCHMARK
CHISLED X
DATA COLLECTION POINT
MONUMENT
PK NAIL
TRAVERSE POINT
QUARTER CORNER
RIGHT-OF-WAY MARKER
SECTION CORNER
WITNESS CORNER
PRIVATE SIGN POST
STREET SIGN
TRAFFIC SIGN
BUSH
CONIFEROUS TREE
DECIDUOUS TREE
STUMP
GAS TANK FILLER CAP
INSPECTION WELL
METER UNKNOWN
MANHOLE
PUMP
UTILITY RISER AT POLE
UTILITY WARNING SIGN
VALVE UNKNOWN
VENT PIPE
JUNCTION BOX
STRAIN POLE
TRAFFIC SIGNAL MAST ARM
TRAFFIC SIGNAL CONTROLLER
TRAFFIC SIGNAL POST 2 WAY
TRAFFIC SIGNAL POST 3 WAY
TRAFFIC SIGNAL PED. SIGNAL HEAD
TRAFFIC SIGNAL PED. PUSH BUTTON
CORES IN PAVEMENT
SOIL BORING
AIR CONDITIONER
ANTENNA
BOLLARD
CATTLE PASS
DELINEATOR
DRAINAGE MARKER
FLAG POLE
GUY POLE
GUY WIRE
MAILBOX
PARKING BLOCK
PILLAR
PARKING METER
POST OR MISC. POLE
TANK
GATE POST
IRON PIN FOUND
FOUND/PLACE CHIS "X"
APP. ℞ APPROXIMATE PROPERTY LINE
APP. ℞ & R/W APPROXIMATE PROP. LINE AND RIGHT-OF-WAY
EXISTING ACCESS CONTROL
PROPOSED ACCESS CONTROL
BREAK
CABLE TV LINE
CABLE TV (FIBER OPTIC) LINE
OVERHEAD CABLE TV LINE
COMMUNICATION LINE
DITCH LEFT (PROFILE)
DITCH RIGHT (PROFILE)
ELECTRIC CONDUIT
OVERHEAD ELECTRIC LINE
UNDERGROUND ELECTRIC LINE
FENCE
FIBER OPTIC LINE
EXISTING FLOW LINE
GAS (SIZE)
EXISTING GUARD RAIL
PROPOSED GUARD RAIL
EXISTING HAND RAIL
PROPOSED HAND RAIL
HEATED WATER
HEDGE LINE
KEYWAY
SANITARY LATERAL
PERMANENT EASEMENT
PM CROSSWALK
PROPERTY LINE
EXISTING RIGHT-OF-WAY
PROPOSED RIGHT-OF-WAY
RAIL ROAD TRACKS
RAW WATER LINE (SIZE)
REMOVAL - 1
REMOVAL - 2
REVERSE SLOPE
SANITARY PIPE
COMBINATION SEWER PIPE
SANITARY FORCE MAIN
SECTION LINE
SHEET PILING
SILT FENCE
STAGE CONSTRUCTION JOINT
STORM EXISTING
STORM PROPOSED
STORM LINE (WATER MAIN QUALITY)
OVERHEAD TELEPHONE (FIBER OPTIC)
UNDERGROUND TELEPHONE (FIBER OPTIC)
OVERHEAD TELEPHONE
UNDERGROUND TELEPHONE
TEMPORARY CONSTRUCTION EASEMENT - 1
TEMPORARY CONSTRUCTION EASEMENT - 2
TEMPORARY TREE EASEMENT
EXISTING TOP/BOTTOM OF SLOPE
PROPOSED TOP/BOTTOM OF SLOPE
TREE LINE
UNDERDRAIN LINE
WATER LINE (SIZE)
WATER IRRIGATION LINE
CONSTRUCTION LIMITS

Clark Dietz
500 N. 3RD STREET
SUITE 270
WAUSAU, WI 54403
PHONE : 715.845.1333 www.clarkdietz.com

90% SUBMITTAL
NOT FOR CONSTRUCTION

PROJECT TITLE
CITY OF NEW BERLIN
WESTRIDGE LIFT STATION REHABILITATION
WAUKESHA COUNTY, WI

DESIGNED BY: DLT
DRAWN BY: IWD
CHECKED BY: TSW
DATE CHECKED: 11/23/21

DATE	REVISION
11/29/21	90% SET
09/30/21	50% SET

DRAWING TITLE
GENERAL NOTES

PROJECT No.
N0430020

DRAWING No.
G-002

DWG 2 OF 31 DWGS

NOTE: DIMENSIONAL DATA IS NOT TO BE OBTAINED BY SCALING ANY PORTION OF THIS DRAWING.

PLOT DATE 11/30/2021 9:43 AM
P:\N0430020_NEW BERLIN - WESTRIDGE LIFT STATION REHA\DESIGN\CAD\SHEETS\01-GENERAL\G-GENNTS.DWG ISAAC W. DOLAN SAVE TIME 11/29/2021 11:15:59 AM

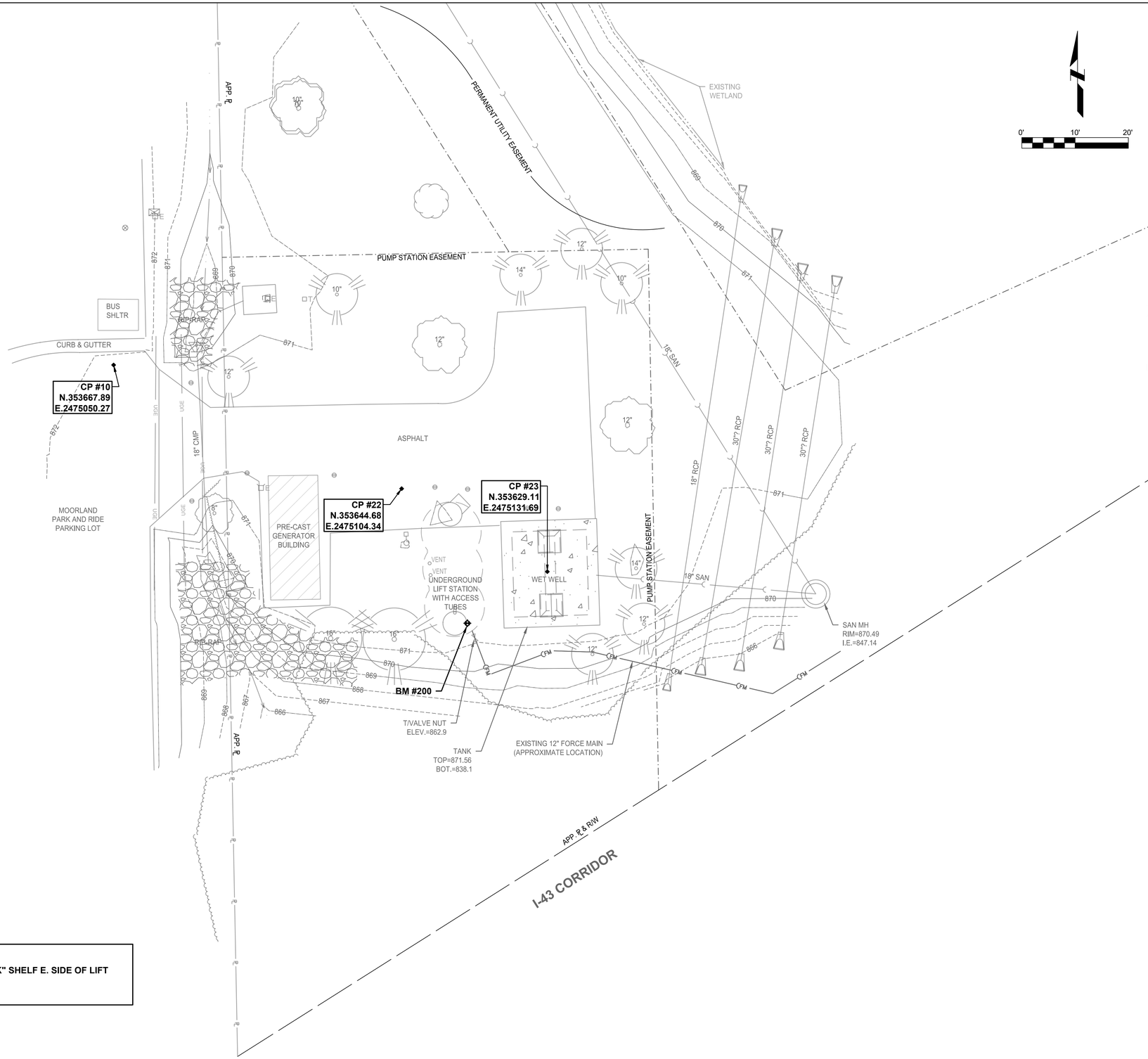

GENERAL NOTES

A. LIFT STATION EASEMENT BOUNDARY APPROXIMATED USING BEARING AND DISTANCE INFORMATION PROVIDED IN CERTIFIED SURVEY MAP (CSM) NO. 8282, DOCUMENT NO. 2218125. NOT DETERMINED BY A PROFESSIONAL LAND SURVEYOR (PLS).

B. SEE WETLAND MAP IN PROJECT MANUAL APPENDIX.

BENCH MARKS:
BM:#200
TOP OF "LIFT HOOK" SHELF E. SIDE OF LIFT STATION CAN
ELEV.=872.54

ClarkDietz
500 N. 3RD STREET
SUITE 200
WAUSAU, WI 54403
PHONE : 715.845.1333 www.clarkdietz.com

90% SUBMITTAL
NOT FOR CONSTRUCTION

PROJECT TITLE
CITY OF NEW BERLIN
WESTRIDGE LIFT STATION REHABILITATION
WAUKESHA COUNTY, WI

DESIGNED BY:	DLT
DRAWN BY:	IWD
CHECKED BY:	TSW
DATE CHECKED:	11/23/21

DATE	REVISION
11/29/21	90% SET
09/30/21	50% SET

DRAWING TITLE
EXISTING SITE CONDITIONS

PROJECT No.
N0430020

DRAWING No.
C-101

DWG 3 OF 31 DWGS

PLOT DATE 11/30/2021 9:43 AM
P:\N0430020_NEW BERLIN - WESTRIDGE LIFT STATION REHA\DESIGN\CAD\SITE\C-EXISTING SITE CONDITIONS.DWG ISAAC W. DOLAN SAVE TIME 11/29/2021 11:16:40 AM
NOTE: DIMENSIONAL DATA IS NOT TO BE OBTAINED BY SCALING ANY PORTION OF THIS DRAWING.

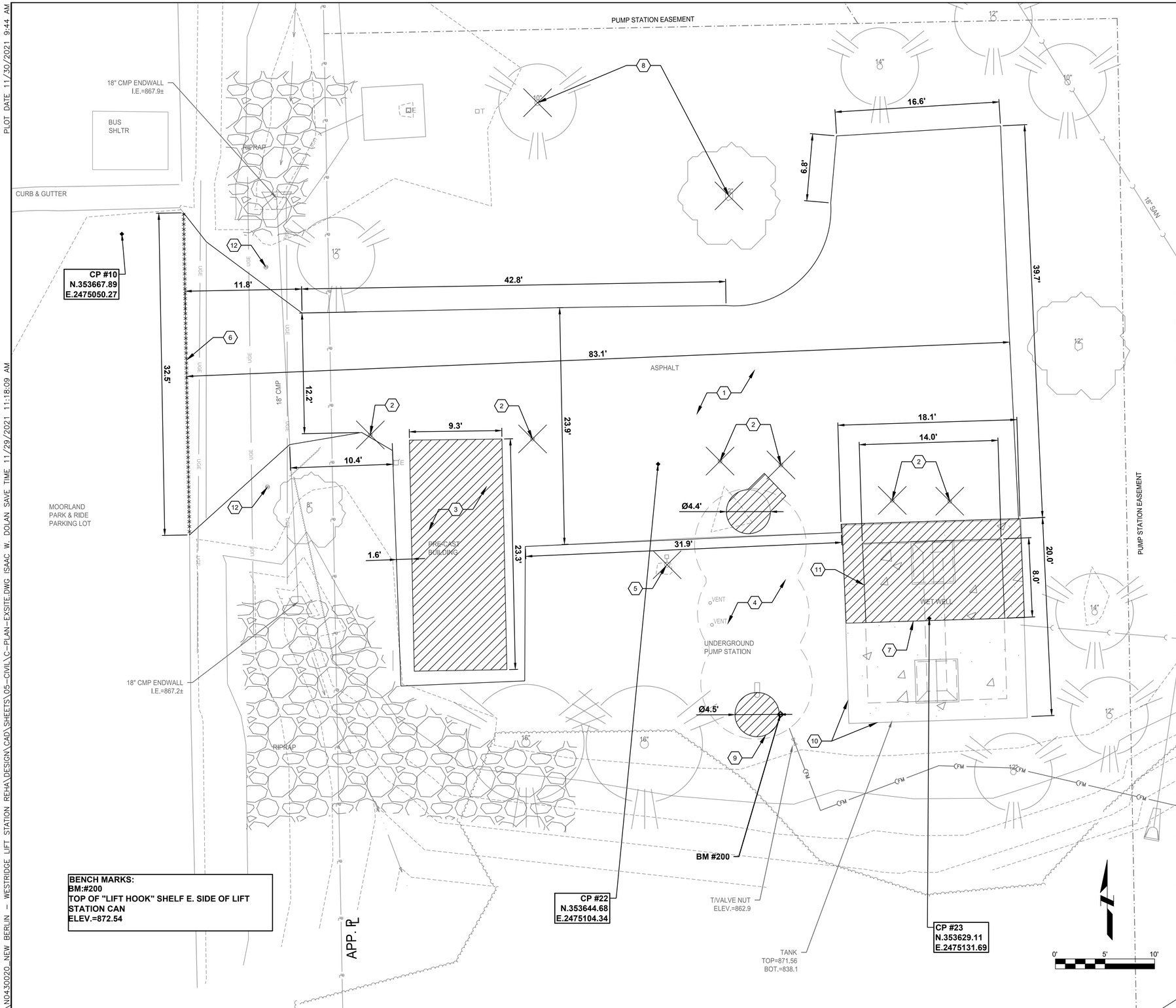

BENCH MARKS:
BM:#200
TOP OF "LIFT HOOK" SHELF E. SIDE OF LIFT STATION CAN
ELEV.=872.54

GENERAL NOTES

A. DO NOT DISTURB GROUND WITHIN 10-FEET OF NEARBY EXISTING WETLANDS.

B. PROTECT EXISTING WET WELL.

C. PROTECT TREES TO REMAIN.

D. DO NOT BLOCK DRIVEWAY. OWNER SHALL HAVE ACCESS AT ALL TIMES DURING CONSTRUCTION.

KEY NOTES

1. REMOVE EXISTING ASPHALT.
2. REMOVE EXISTING BOLLARDS (6 REQ'D).
3. REMOVE EXISTING PRE-CAST BACKUP GENERATOR BUILDING. SALVAGE GENERATOR SET AND PANEL AND RETURN TO OWNER.
4. ABANDON EXISTING LIFT STATION AS SPECIFIED IN THE PROJECT MANUAL.
5. REMOVE OVERHEAD LIGHT AND BASE. FOR ASSOCIATED ELECTRICAL REMOVAL SEE SHEET E-101.
6. SAWCUT EXISTING DRIVEWAY.
7. REMOVE ACCESS HATCH AND SECTIONS OF PRECAST COVER. SEE SHEET S-201.
8. REMOVE TREES BY CLEARING AND GRUBBING.
9. REMOVE EXISTING FORCE MAIN RISER IN ACCESS TUBE.
10. PROTECT EXISTING WET WELL.
11. REMOVE A SECTION OF THE EXISTING 6'X6' CONCRETE FILLET AND ALL EXISTING PIPING IN WET WELL. SEAL ANY OPENINGS IN WET WELL STRUCTURE WITH GROUT THAT MAY BE EXPOSED BY FILLET AND PIPING REMOVAL WORK. SEE ON PLAN SHEET .
12. PROTECT EXISTING GATE.

ClarkDietz
500 N. 3RD STREET
SUITE 700
WAUSAU, WI 54403
PHONE : 715.845.1333 www.clarkdietz.com

90% SUBMITTAL
NOT FOR CONSTRUCTION

PROJECT TITLE
CITY OF NEW BERLIN
WESTRIDGE LIFT STATION REHABILITATION
WAUKESHA COUNTY, WI

DESIGNED BY: DLT
DRAWN BY: IWD
CHECKED BY: TSW
DATE CHECKED: 11/23/21

DATE	REVISION
11/29/21	90% SET
09/30/21	50% SET

DRAWING TITLE
SITE DEMOLITION PLAN

PROJECT No.
N0430020

DRAWING No.
C-102

DWG 4 OF 31 DWGS

PLOT DATE 11/30/2021 9:44 AM
SAVE TIME 11/29/2021 11:18:09 AM
P:\N0430020_NEW BERLIN - WESTRIDGE LIFT STATION REHA\DESIGN\CAD\SHEETS\05-CIVIL\C-PLAN-EXSITE.DWG ISAAC W. DOLAN

NOTE: DIMENSIONAL DATA IS NOT TO BE OBTAINED BY SCALING ANY PORTION OF THIS DRAWING.

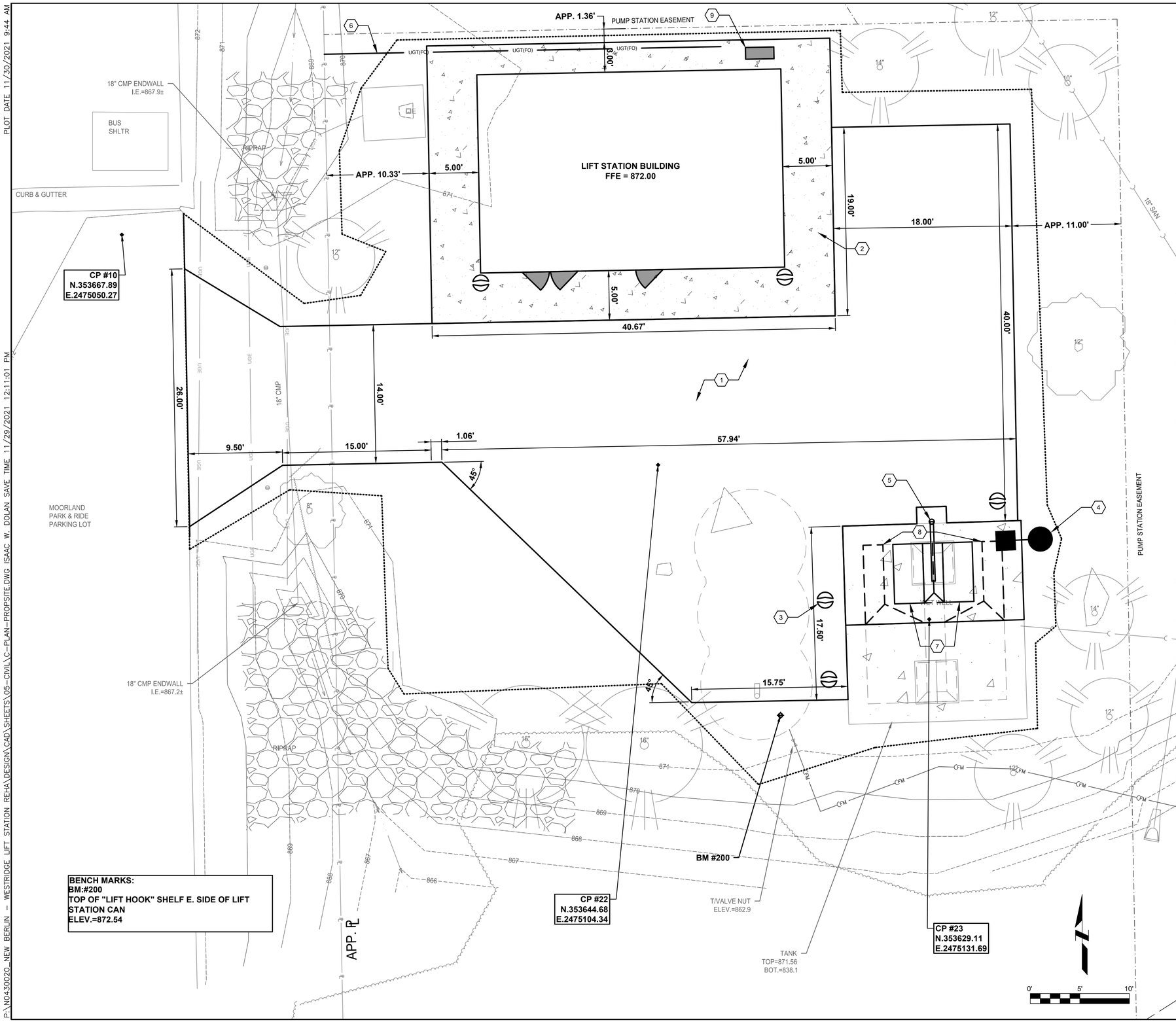

BENCH MARKS:
BM:#200
TOP OF "LIFT HOOK" SHELF E. SIDE OF LIFT STATION CAN
ELEV.=872.54

GENERAL NOTES

A. ALL DIMENSIONS ARE IN FEET UNLESS OTHERWISE NOTED IN THE PLANS.

B. PROTECT EXISTING WET WELL.

C. PROTECT TREES TO REMAIN.

D. DO NOT BLOCK DRIVEWAY. OWNER SHALL HAVE ACCESS AT ALL TIMES DURING CONSTRUCTION.

E. REPLACE ALL DISTURBED TURF AREAS WITH 6 INCHES OF TOPSOIL, SEED, FERTILIZER, AND MULCH.

F. GRADE SITE TO DIRECT WATER AWAY FROM ALL STRUCTURES AND OFF THE PAVEMENT.

KEY NOTES

1. CONSTRUCT ASPHALT DRIVEWAY. SEE DETAIL 6/C-502.
2. CONCRETE APRON AROUND BUILDING. SEE DETAIL 8/C-502.
3. BOLLARD (TYP.). SEE DETAIL 9/C-502.
4. OVERHEAD PARKING LOT LIGHT. SEE ELECTRICAL DRAWINGS FOR MORE INFORMATION.
5. DAVIT CRANE. SEE DETAIL 11/C-503.
6. CONDUIT FOR FUTURE FIBER OPTIC CABLES BY OTHERS.
7. TWO 36" X 72" ALUMINUM ACCESS HATCHES WITH SAFETY GRATES.
8. WET WELL INTERIOR IMPROVEMENTS. SEE DETAIL 12/C-503.
9. AIR CONDITIONING CONDENSER UNIT. SEE ELECTRICAL AND HVAC DRAWINGS FOR MORE INFORMATION.

ClarkDietz
500 N. 3RD STREET
SUITE 700
WAUSAU, WI 54403
PHONE : 715.845.1333 www.clarkdietz.com

90% SUBMITTAL
NOT FOR CONSTRUCTION

PROJECT TITLE
CITY OF NEW BERLIN
WESTRIDGE LIFT STATION REHABILITATION
WAUKESHA COUNTY, WI

DESIGNED BY:	DLT
DRAWN BY:	IWD
CHECKED BY:	TSW
DATE CHECKED:	11/23/21

DATE	REVISION
11/29/21	90% SET
09/30/21	50% SET

DRAWING TITLE
SITE PLAN

PROJECT No.
N0430020

DRAWING No.
C-103

DWG 5 OF 31 DWGS

NOTE: DIMENSIONAL DATA IS NOT TO BE OBTAINED BY SCALING ANY PORTION OF THIS DRAWING.

PLOT DATE 11/30/2021 9:44 AM
SAVE TIME 11/29/2021 12:11:01 PM
P:\N0430020_NEW BERLIN - WESTRIDGE LIFT STATION REHA\DESIGN\CAD\SHEETS\05-CIVIL\C-PLAN-PROPSITE.DWG ISAAC W. DOLAN

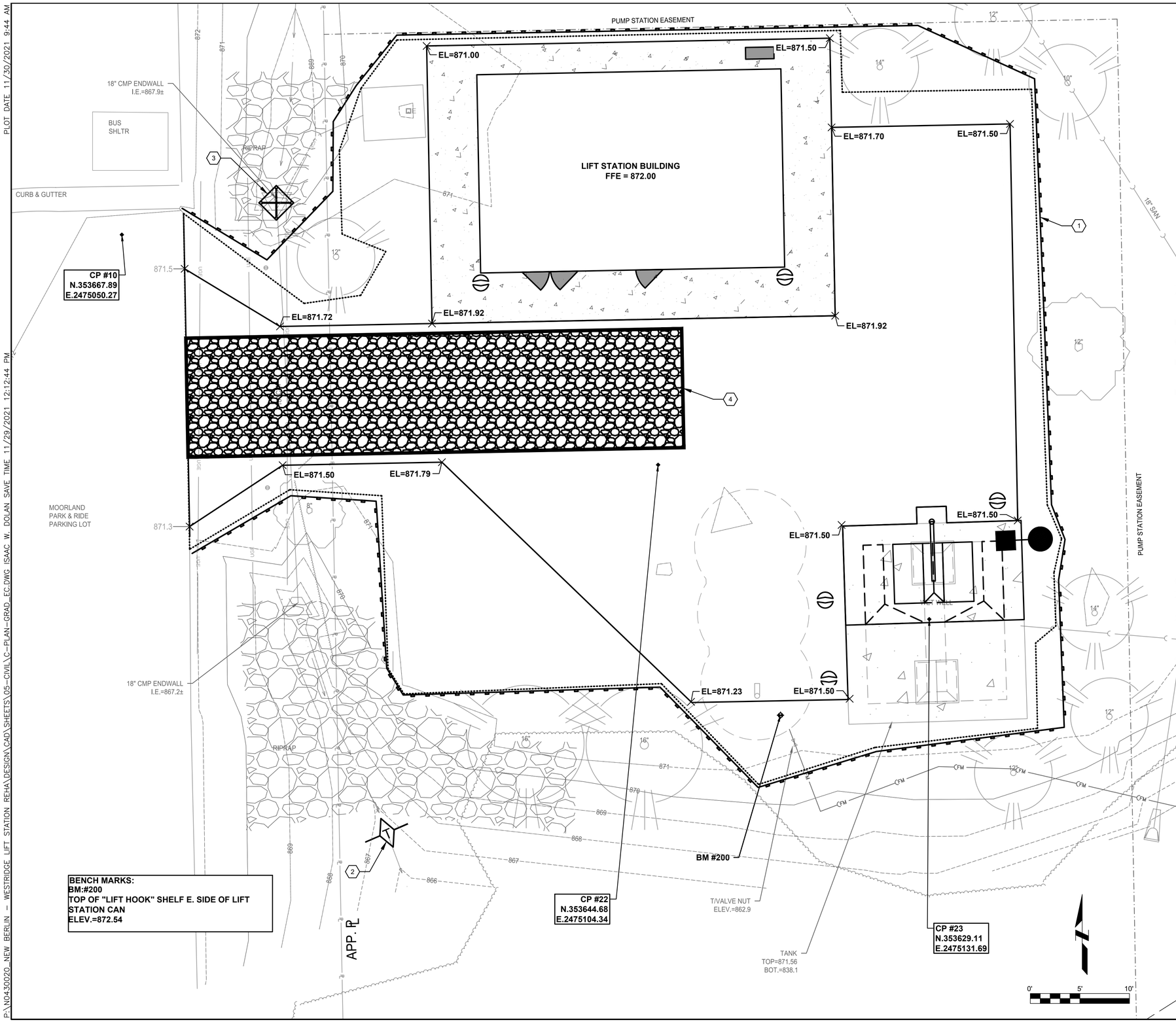

BENCH MARKS:
BM:#200
TOP OF "LIFT HOOK" SHELF E. SIDE OF LIFT STATION CAN
ELEV.=872.54

GENERAL NOTES

A. DO NOT DISTURB GROUND WITHIN 10-FEET OF NEARBY EXISTING WETLANDS.

B. PROTECT EXISTING WET WELL.

C. PROTECT TREES TO REMAIN.

D. DO NOT BLOCK DRIVEWAY. OWNER SHALL HAVE ACCESS AT ALL TIMES DURING CONSTRUCTION.

E. REPLACE ALL DISTURBED TURF AREAS WITH 6 INCHES OF TOPSOIL, SEED, FERTILIZER, AND MULCH.

KEY NOTES

1. INSTALL AND MAINTAIN SILT FENCE. SEE DETAIL 2/C-501.
2. INSTALL TEMPORARY DITCH CHECK. SEE DETAIL 1/C-501.
3. INSTALL TEMPORARY CULVERT PIPE CHECK. SEE DETAIL 3/C-501.
4. INSTALL TRACKING PAD. SEE DETAIL 4/C-501.

ClarkDietz
500 N. 3RD STREET
SUITE 200
WAUSAU, WI 54403
PHONE : 715.845.1333 www.clarkdietz.com

90% SUBMITTAL
NOT FOR CONSTRUCTION

PROJECT TITLE
CITY OF NEW BERLIN
WESTRIDGE LIFT STATION REHABILITATION
WAUKESHA COUNTY, WI

DESIGNED BY:	DLT
DRAWN BY:	IWD
CHECKED BY:	TSW
DATE CHECKED:	11/23/21

DATE	REVISION
11/29/21	90% SET
09/30/21	50% SET

DRAWING TITLE
SITE GRADING AND EROSION CONTROL PLAN

PROJECT No.
N0430020

DRAWING No.
C-104

DWG 6 OF 31 DWGS

NOTE: DIMENSIONAL DATA IS NOT TO BE OBTAINED BY SCALING ANY PORTION OF THIS DRAWING.

P:\N0430020_NEW BERLIN - WESTRIDGE LIFT STATION REHA\DESIGN\CAD\SHEETS\05-CIVIL\C-PLAN-GRAD_EC.DWG ISAAC W. DOLAN SAVE TIME 11/29/2021 12:12:44 PM PLOT DATE 11/30/2021 9:44 AM

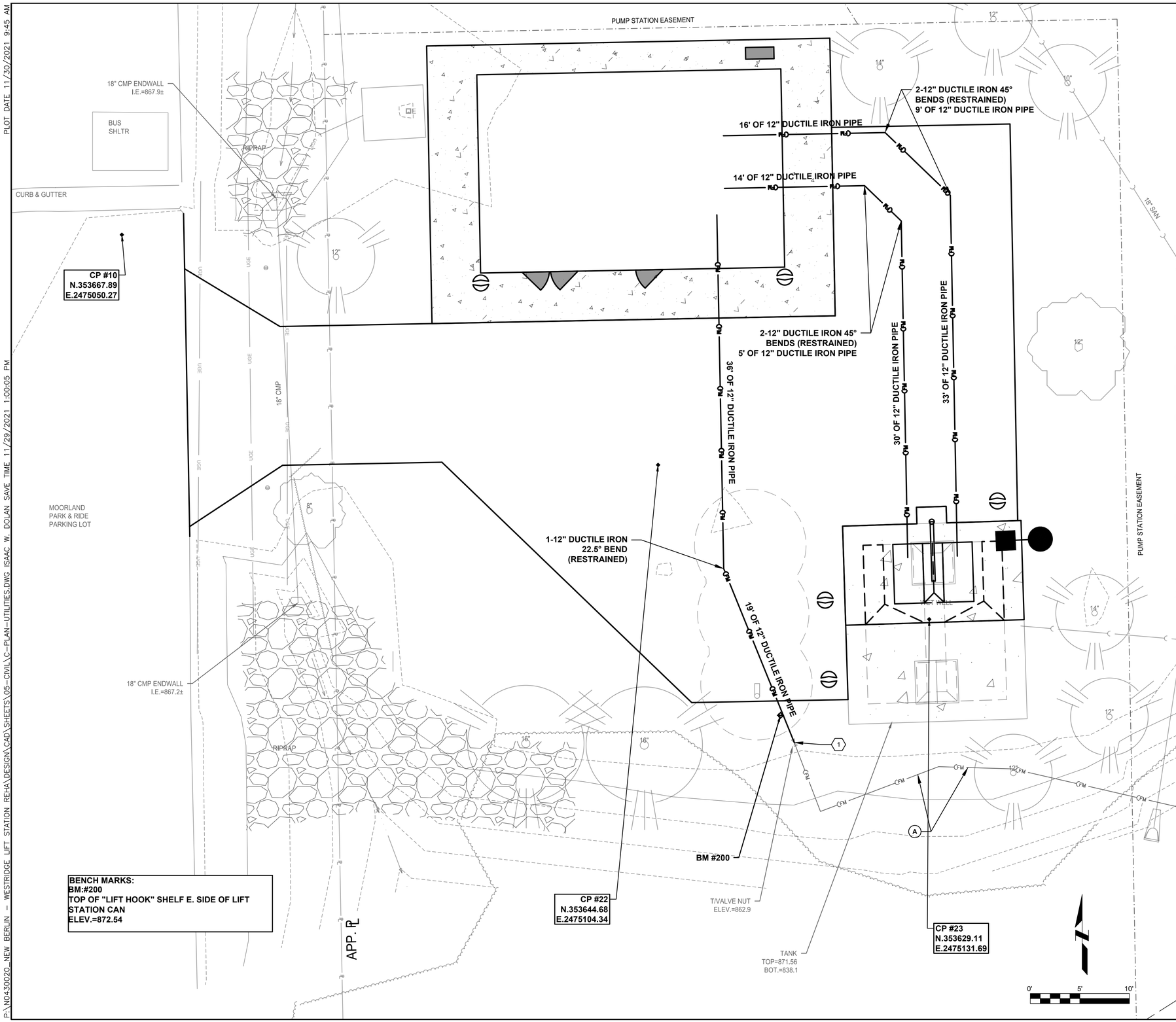

BENCH MARKS:
BM:#200
TOP OF "LIFT HOOK" SHELF E. SIDE OF LIFT STATION CAN
ELEV.=872.54

GENERAL NOTES

A. APPROXIMATE LOCATION OF EXISTING 12-INCH FORCE MAIN ACCORDING TO CITY OF NEW BERLIN SANITARY SEWER AS-BUILT (FILE NO. A 94-437). CONTRACTOR SHALL FIELD VERIFY LOCATION AND ELEVATION.

B. DO NOT DISTURB GROUND WITHIN 10-FEET OF NEARBY EXISTING WETLANDS.

C. PROTECT EXISTING WET WELL.

D. PROTECT TREES TO REMAIN.

E. DO NOT BLOCK DRIVEWAY. OWNER SHALL HAVE ACCESS AT ALL TIMES DURING CONSTRUCTION.

F. PROVIDE DEWATERING AS NECESSARY TO COMPLETE THE WORK SHOWN IN THE PLAN. SHEET PILING AND/OR SHORING MAY BE REQUIRED. ALL DEWATERING-RELATED ACTIVITIES (E.G., PERMITTING, WELLS, TREATMENT, ETC.) SHALL BE CONSIDERED INCIDENTAL TO THE CONTRACT.

G. PROVIDE BYPASS PUMPING AS NECESSARY DURING CONSTRUCTION. BYPASS PUMPING SHALL BE CONSIDERED INCIDENTAL TO THE CONTRACT.

H. BYPASS PUMPING WILL BE REQUIRED DURING SWITCH FROM THE EXISTING LIFT STATION TO THE NEW STATION. INSTALL MANHOLE PLUGS, HOSE, PORTABLE PUMPS, ETC. AS NECESSARY. HAULING TRUCKS SHALL BE AVAILABLE AS NEEDED. AT NO POINT SHALL CONTRACTOR ALLOW SEWAGE TO SPILL ON THE GROUND.

KEY NOTES

1. CONNECT TO EXISTING 12-INCH PVC FORCE MAIN. EXISTING FORCE MAIN LAYOUT AND ELEVATION IS APPROXIMATE. CONTRACTOR TO PERFORM SUBSURFACE EXPLORATION TO FIELD VERIFY LOCATION AND ELEVATION. PROTECT EXISTING VALVE.

ClarkDietz
500 N. 3RD STREET
SUITE 720
WAUSAU, WI 54403
PHONE : 715.845.1333 www.clarkdietz.com

90% SUBMITTAL
NOT FOR CONSTRUCTION

PROJECT TITLE
CITY OF NEW BERLIN
WESTRIDGE LIFT STATION REHABILITATION
WAUKESHA COUNTY, WI

DESIGNED BY:	DLT
DRAWN BY:	IWD
CHECKED BY:	TSW
DATE CHECKED:	11/23/21

DATE	REVISION
11/29/21	90% SET
09/30/21	50% SET

DRAWING TITLE
SITE UTILITIES PLAN

PROJECT No.
N0430020

DRAWING No.
C-105

DWG 7 OF 31 DWGS

NOTE: DIMENSIONAL DATA IS NOT TO BE OBTAINED BY SCALING ANY PORTION OF THIS DRAWING.

P:\N0430020_NEW BERLIN - WESTRIDGE LIFT STATION REHA\DESIGN\CAD\SHEETS\05-CIVIL\C-PLAN-UTILITIES.DWG ISAAC W. DOLAN SAVE TIME 11/29/2021 1:00:05 PM PLOT DATE 11/30/2021 9:45 AM

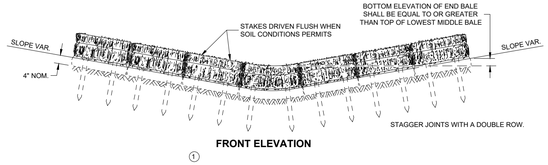

FRONT ELEVATION

①

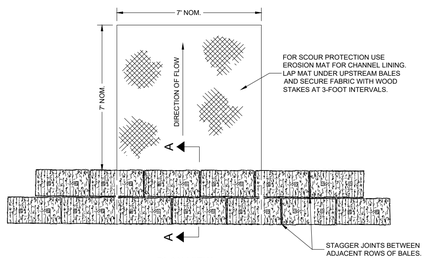

PLAN VIEW

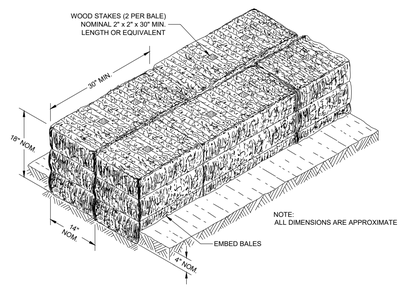

SECTION A - A

1 TEMPORARY DITCH CHECK

NOT TO SCALE

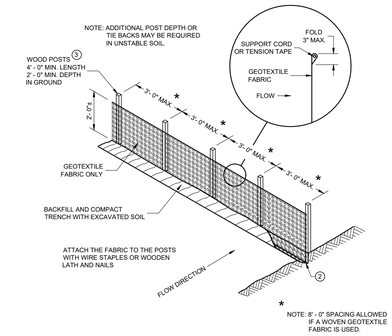

SILT FENCE

GENERAL NOTES

DETAILS OF CONSTRUCTION NOT SHOWN ON THIS DRAWING SHALL CONFORM TO THE PERTINENT REQUIREMENTS OF THE STANDARD SPECIFICATIONS AND APPLICABLE SPECIAL PROVISIONS.

① HORIZONTAL BRACE REQUIRED WITH 2" X 4" WOODEN FRAME OR EQUIVALENT AT TOP OF POSTS.

② FOR MANUAL INSTALLATIONS THE TRENCH SHALL BE A MINIMUM OF 4" WIDE AND 6" DEEP TO BURY AND ANCHOR THE GEOTEXTILE FABRIC. FOLD MATERIAL TO FIT TRENCH AND BACKFILL AND COMPACT TRENCH WITH EXCAVATED SOIL.

③ WOOD POSTS SHALL BE A MINIMUM SIZE OF 1 1/8" X 1 1/8" OF OAK OR HICKORY.

④ SILT FENCE TO EXTEND ACROSS THE TOP OF THE PIPE.

⑤ CONSTRUCT SILT FENCE FROM A CONTINUOUS ROLL IF POSSIBLE BY CUTTING LENGTHS TO AVOID JOINTS. IF A JOINT IS NECESSARY USE ONE OF THE FOLLOWING TWO METHODS: A) OVERLAP THE END POSTS AND TWIST, OR ROTATE, AT LEAST 180 DEGREES, B) HOOK THE END OF EACH SILT FENCE LENGTH.

SOURCE: WISCONSIN DEPARTMENT OF TRANSPORTATION, SDD 08E09 SILT FENCE

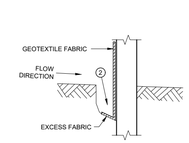

TRENCH DETAIL

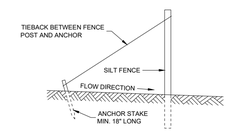

SILT FENCE TIE BACK

(WHEN REQUIRED BY THE ENGINEER)

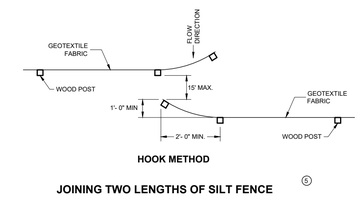

HOOK METHOD

JOINING TWO LENGTHS OF SILT FENCE

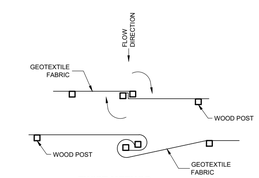

TWIST METHOD

2 SILT FENCE

NOT TO SCALE

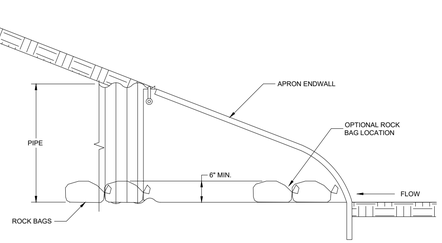

SIDE VIEW

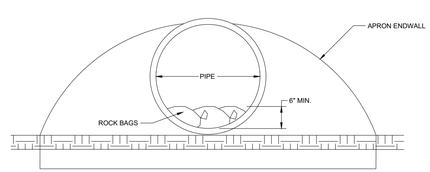

END VIEW

(INSTALL ON INLET END ONLY)

3 CULVERT PIPE CHECK

NOT TO SCALE

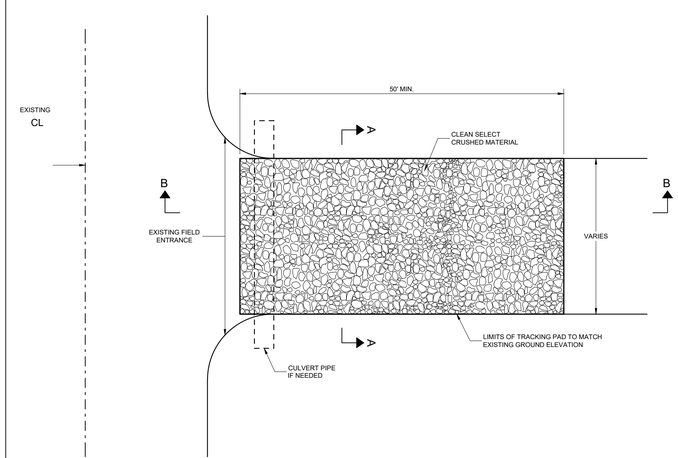

GENERAL NOTES

DETAILS OF CONSTRUCTION, MATERIALS AND WORKMANSHIP NOT SHOWN ON THIS DRAWING SHALL CONFORM TO THE PERTINENT REQUIREMENTS OF THE STANDARD SPECIFICATIONS AND THE APPLICABLE SPECIAL PROVISIONS.

TRACKING PAD SHALL BE INSPECTED DAILY. DEFICIENT AREAS SHALL BE REPAIRED OR REPLACED IMMEDIATELY.

TRACKING PAD TO BE REMOVED AFTER CONSTRUCTION IS COMPLETED.

TRACKING PAD SHALL BE THE FULL WIDTH OF THE EGRESS POINT.

SURFACE WATER MUST BE PREVENTED FROM PASSING THROUGH THE TRACKING PAD. FLOWS SHALL BE DIVERTED AWAY, AROUND OR CONVEYED UNDER THE TRACKING PAD.

CULVERT PIPE OR OTHER BMP USED TO DIVERT WATER AWAY, AROUND OR UNDER THE TRACKING PAD SHALL BE DESIGNED TO CONVEY THE 2 YEAR - 24 HOUR EVENT.

THE COST OF ADDITIONAL BMP TO DIVERT WATER ARE INCIDENTAL TO THE TRACKING PAD BID ITEM.

SOURCE: WISCONSIN DEPARTMENT OF TRANSPORTATION, SDD 08E14 TRACKING PAD

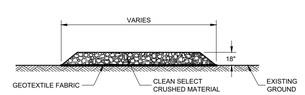

SECTION A - A

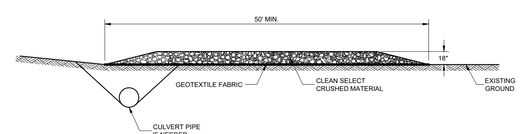

SECTION B - B

4 TRACKING PAD

NOT TO SCALE

ClarkDietz
500 N. 3RD STREET
SUITE 275
WAUSAU, WI 54403
PHONE : 715.845.1333 www.clarkdietz.com

90% SUBMITTAL
NOT FOR CONSTRUCTION

PROJECT TITLE
CITY OF NEW BERLIN
WESTRIDGE LIFT STATION REHABILITATION
WAUKESHA COUNTY, WI

DESIGNED BY:	DLT
DRAWN BY:	IWD
CHECKED BY:	TSW
DATE CHECKED:	11/23/21

DATE	REVISION
11/29/21	90% SET
09/30/21	50% SET

DRAWING TITLE
EROSION CONTROL DETAILS

PROJECT No.
N0430020

DRAWING No.
C-501

DWG 8 OF 31 DWGS

NOTE: DIMENSIONAL DATA IS NOT TO BE OBTAINED BY SCALING ANY PORTION OF THIS DRAWING.

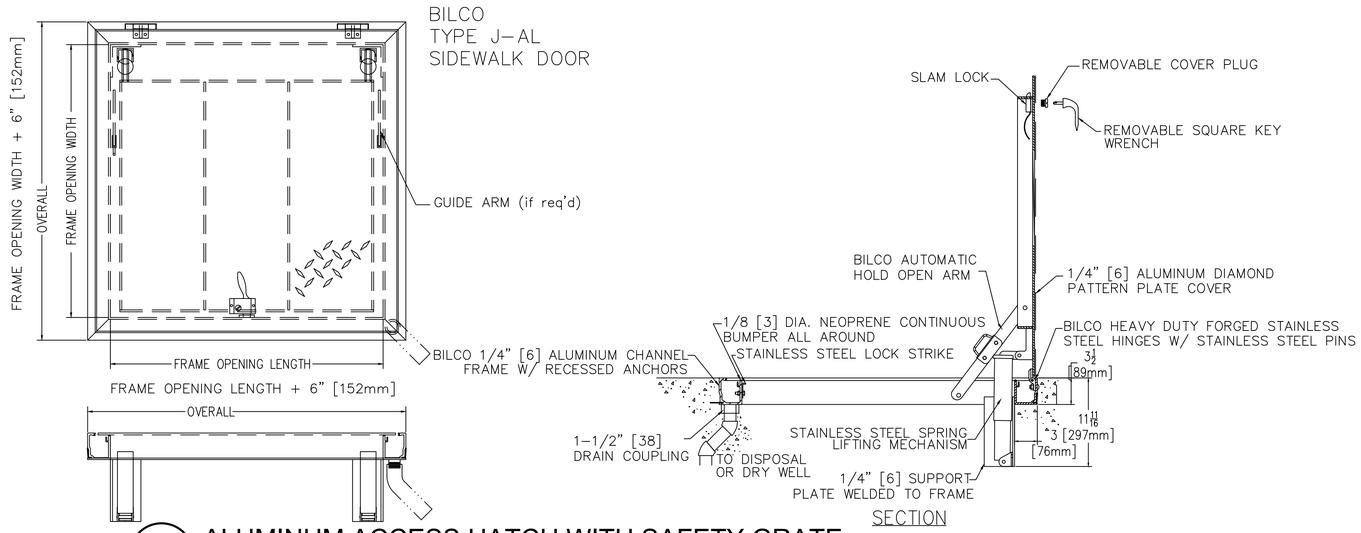

5 ALUMINUM ACCESS HATCH WITH SAFETY GRATE

NOT TO SCALE

PROPOSED GRADE IS ASSUMED TO BE EXISTING GRADE, WITH MATCHING AT THE CALLED OUT ELEVATIONS ON THE NEW STRUCTURES.

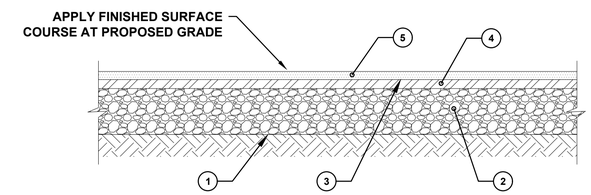

1. EXCAVATE, GRADE, SHAPE AND COMPACT SUBGRADE (CONTACT ENGINEER FOR DESIGN OPTIONS WHEN ENCOUNTERING AREAS OF UNSUITABLE SUBGRADE)
2. CRUSHED AGGREGATE BASE COURSE, 8"
3. BITUMINOUS MATERIALS (PRIME COAT) @ 0.70 GAL/SY
4. BITUMINOUS CONCRETE BINDER COURSE, 3"
5. BITUMINOUS CONCRETE SURFACE COURSE, 2"

6 TYPICAL ASPHALT DRIVE SECTION

NOT TO SCALE

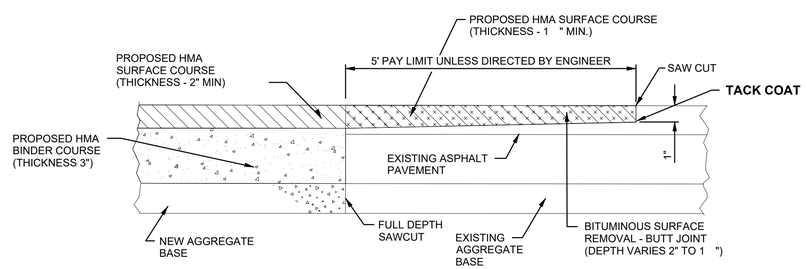

7 BUTT JOINT

NOT TO SCALE

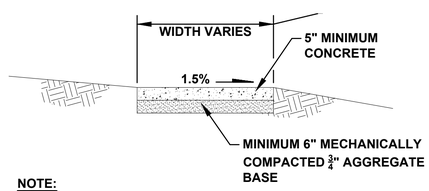

NOTE:
SIDEWALKS TO HAVE TOOLED CONTROL JOINT 5'-0" O.C. WITH EXPANSION JOINTS 25' O.C. MAX. AND ADJACENT TO ALL STRUCTURES.

8 CONCRETE APRON

NOT TO SCALE

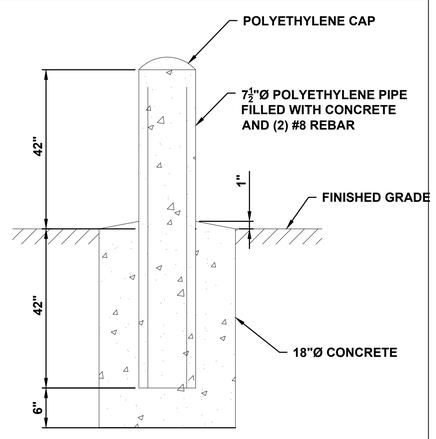

9 BOLLARD

NOT TO SCALE

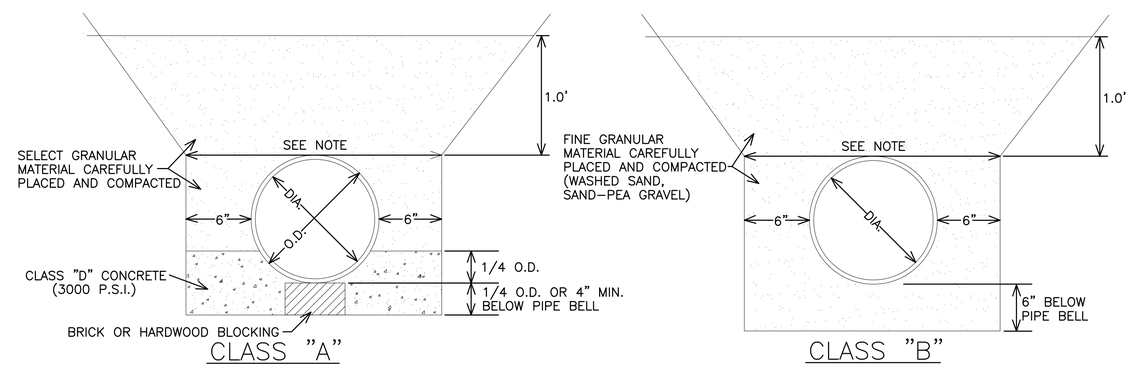

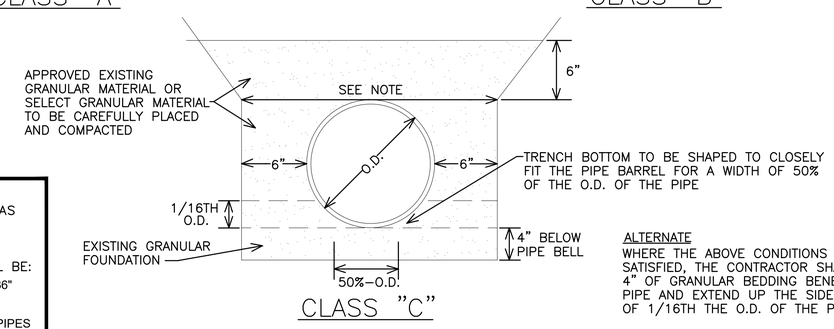

NOTE:
THE TRENCH WIDTH IS TO BE TAKEN AS THE HORIZONTAL DISTANCE AT THE OUTSIDE TOP OF THE PIPE.

THE MAXIMUM ALLOWABLE WIDTH SHALL BE:
1.) 3.0' GREATER THAN OUTSIDE DIA. FOR 36" OR LARGER PIPE

2.) 2.0' GREATER THAN OUTSIDE DIA. FOR PIPES LESS THAN 36" IN DIA.

ALTERNATE
WHERE THE ABOVE CONDITIONS ARE NOT SATISFIED, THE CONTRACTOR SHALL PLACE 4" OF GRANULAR BEDDING BENEATH THE PIPE AND EXTEND UP THE SIDE A DISTANCE OF 1/16TH THE O.D. OF THE PIPE

10 PIPE BEDDING CLASSIFICATIONS

NOT TO SCALE

ClarkDietz
500 N. 3RD STREET
SUITE 700
WAUSAU, WI 54403
PHONE : 715.845.1333 www.clarkdietz.com

90% SUBMITTAL
NOT FOR CONSTRUCTION

PROJECT TITLE
CITY OF NEW BERLIN
WESTRIDGE LIFT STATION REHABILITATION
WAUKESHA COUNTY, WI

DESIGNED BY:	DLT
DRAWN BY:	IWD
CHECKED BY:	TSW
DATE CHECKED:	11/23/21

DATE	REVISION
11/29/21	90% SET
09/30/21	50% SET

DRAWING TITLE
CONSTRUCTION DETAILS (1 OF 2)

PROJECT No.
N0430020

DRAWING No.
C-502

DWG 9 OF 31 DWGS

PLOT DATE 11/30/2021 9:45 AM
P:\N0430020_NEW BERLIN - WESTRIDGE LIFT STATION REHA\DESIGN\CAD\SHEETS\05-CIVIL\C-DETAILS.DWG ISAAC W. DOLAN SAVE TIME 11/29/2021 11:18:28 AM
NOTE: DIMENSIONAL DATA IS NOT TO BE OBTAINED BY SCALING ANY PORTION OF THIS DRAWING.

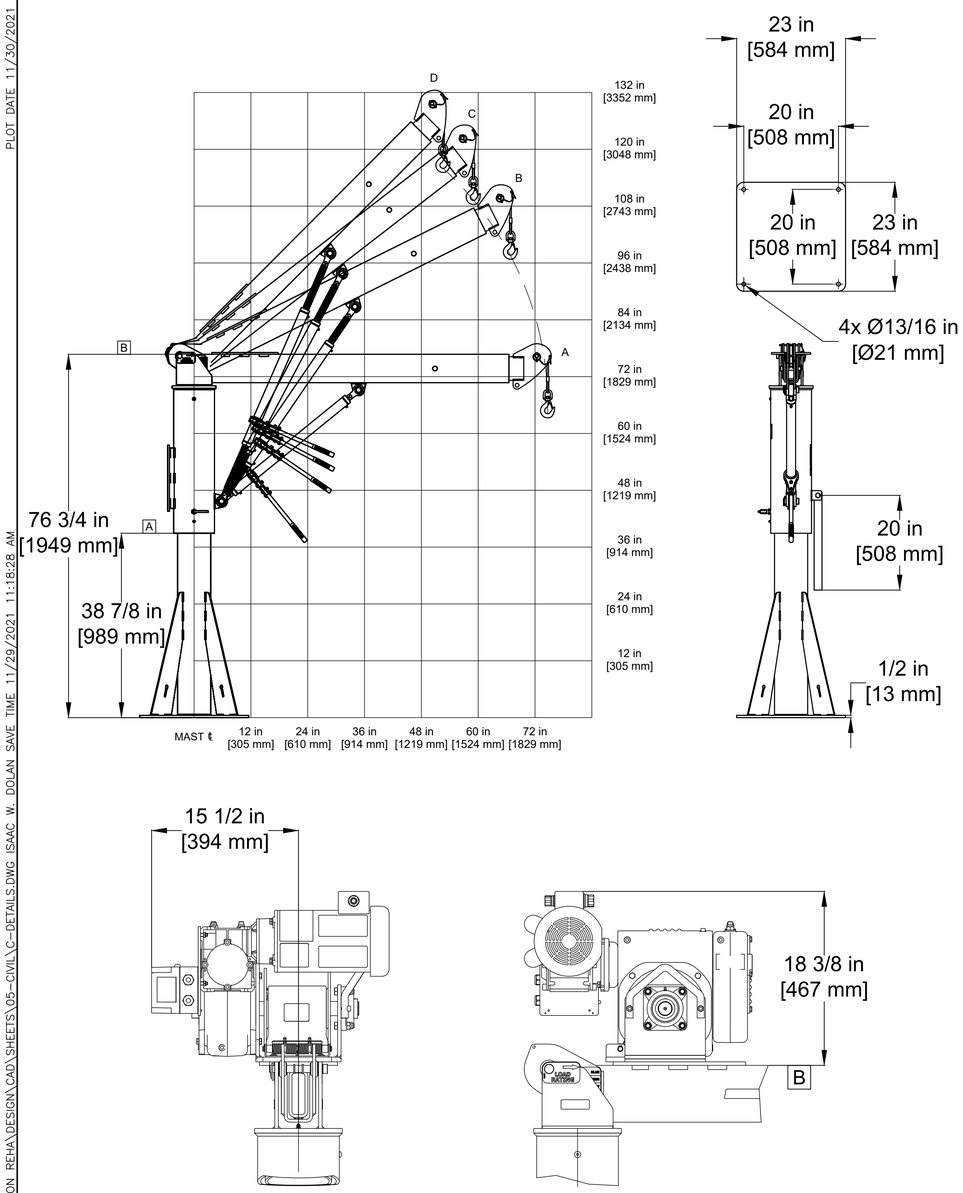

11 DAVIT CRANE
NOT TO SCALE

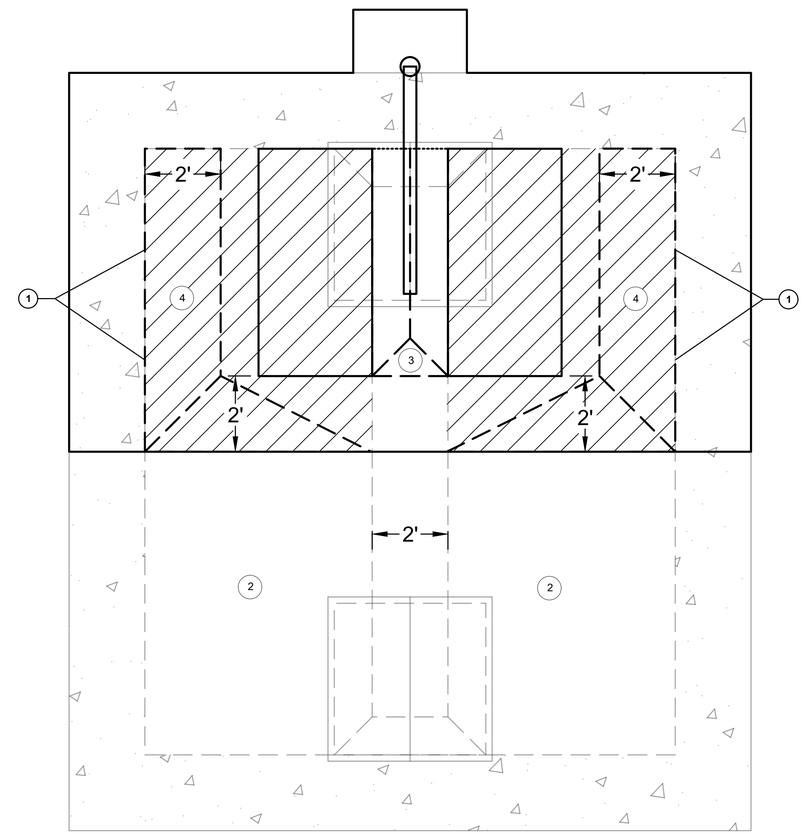

1. CONTRACTOR TO REMOVE NORTH HALF OF EXISTING 6'X6' CONCRETE FILLETS.
2. SOUTH HALF OF EXISTING 6'X6' CONCRETE FILLETS TO REMAIN.
3. 1'X1' POURED IN PLACE CONCRETE FILLET.
4. POURED IN PLACE CONCRETE FILLET AT 1:1 SLOPE.

12 WET WELL INTERIOR IMPROVEMENTS
NOT TO SCALE

ClarkDietz
500 N. 3RD STREET
SUITE 200
WAUSAU, WI 54403
PHONE : 715.845.1333 www.clarkdietz.com

90% SUBMITTAL
NOT FOR CONSTRUCTION

PROJECT TITLE
CITY OF NEW BERLIN
WESTRIDGE LIFT STATION REHABILITATION
WAUKESHA COUNTY, WI

DESIGNED BY:	DLT
DRAWN BY:	IWD
CHECKED BY:	TSW
DATE CHECKED:	11/23/21

DATE	REVISION
11/29/21	90% SET
09/30/21	50% SET

DRAWING TITLE
CONSTRUCTION DETAILS (2 OF 2)

PROJECT No.
N0430020

DRAWING No.
C-503

DWG 10 OF 31 DWGS

NOTE: DIMENSIONAL DATA IS NOT TO BE OBTAINED BY SCALING ANY PORTION OF THIS DRAWING.

P:\N0430020_NEW BERLIN - WESTRIDGE LIFT STATION REHA\DESIGN\CAD\SHEETS\05-CIVIL\C-DETAILS.DWG ISAAC W. DOLAN SAVE TIME 11/29/2021 11:18:28 AM PLOT DATE 11/30/2021 9:46 AM

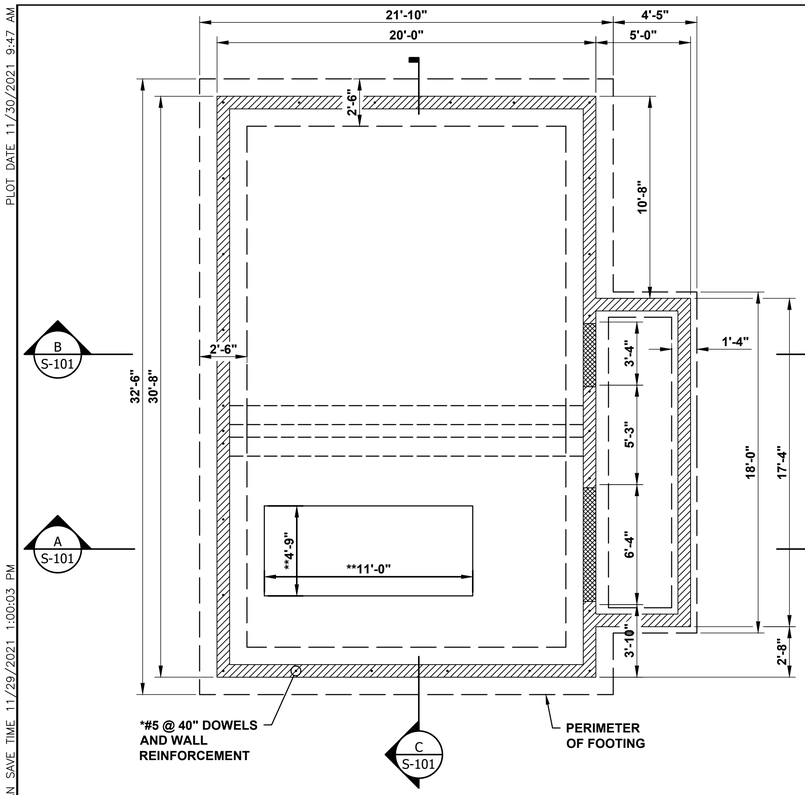

FOUNDATION PLAN

0 1' 2' 4' 8'

SCALE 1/4" = 1'

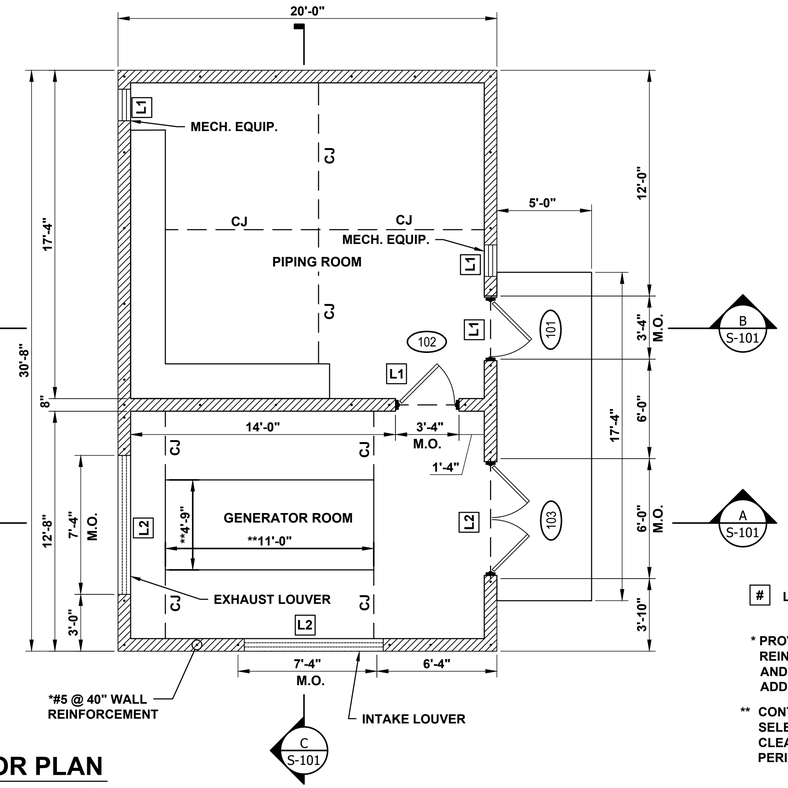

FLOOR PLAN

0 1' 2' 4' 8'

SCALE 1/4" = 1'

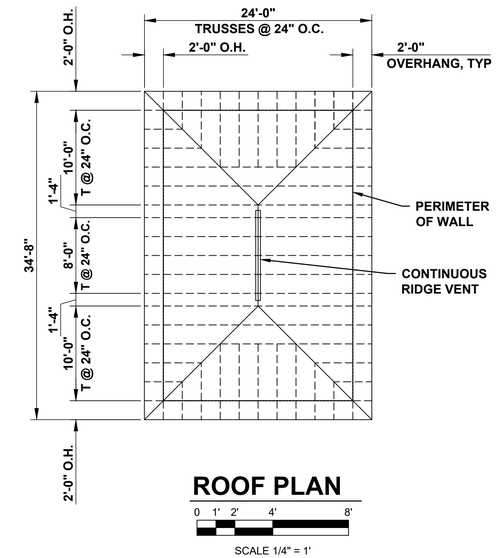

ROOF PLAN

0 1' 2' 4' 8'

SCALE 1/4" = 1'

[#] LINTEL, SEE DETAILS ON S-102

* PROVIDE ADDITIONAL DOWELS AND WALL REINFORCEMENT AT CORNERS, WALL INTERSECTIONS, AND ADJACENT TO OPENINGS AS SHOWN. SEE S-501 FOR ADDITIONAL MASONRY DETAILS.

** CONTRACTOR SHALL REVISE DIMENSIONS TO FIT SELECTED GENERATOR. PROVIDE MINIMUM 6" CLEARANCE BETWEEN EDGE OF CONCRETE AND PERIMETER OF GENERATOR BASE. SEE DETAIL 2 ON S-501.

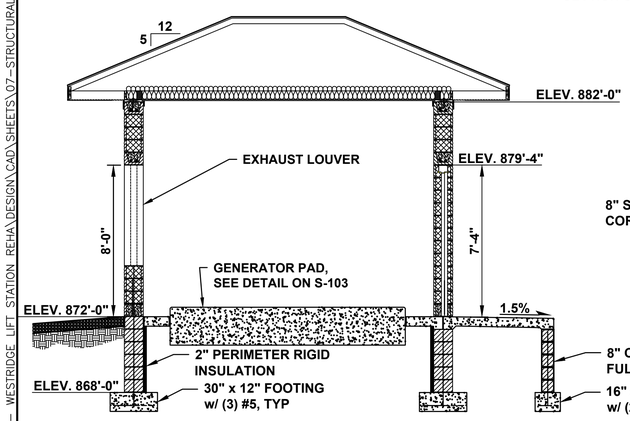

SECTION A-A

0 1' 2' 4' 8'

SCALE 1/4" = 1'

** ALTERNATE BID ITEM:
STANDING SEAM METAL ROOF OVER SELF-ADHERED ICE & WATER SHIELD.

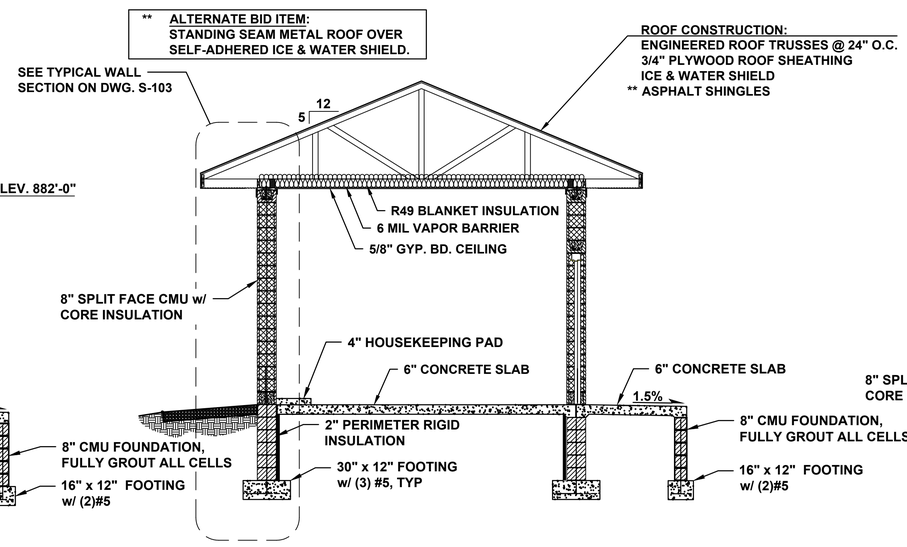

SECTION B-B

0 1' 2' 4' 8'

SCALE 1/4" = 1'

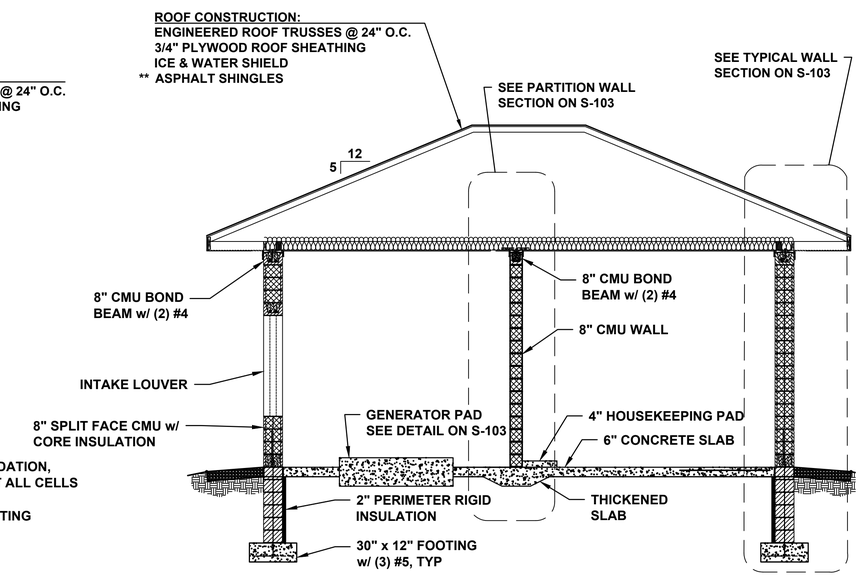

SECTION C-C

0 1' 2' 4' 8'

SCALE 1/4" = 1'

ClarkDietz
500 N. 3RD STREET
SUITE 200
WAUSAU, WI 54403
PHONE : 715.845.1333 www.clarkdietz.com

90% SUBMITTAL
NOT FOR CONSTRUCTION

PROJECT TITLE
CITY OF NEW BERLIN
WESTRIDGE LIFT STATION REHABILITATION
WAUKESHA COUNTY, WI

DESIGNED BY:	DLT
DRAWN BY:	IWD
CHECKED BY:	TSW
DATE CHECKED:	11/23/21

DATE	REVISION
11/29/21	90% SET
09/30/21	50% SET

DRAWING TITLE
STRUCTURAL BUILDING PLAN

PROJECT No.
N0430020

DRAWING No.
S-101

DWG 11 OF 31 DWGS

P:\N0430020_NEW BERLIN - WESTRIDGE LIFT STATION REHA\DESIGN\CAD\SHEETS\07-STRUCTURAL\S-PLAN.DWG ISAAC W. DOLAN SAVE TIME 11/29/2021 1:00:03 PM PLOT DATE 11/30/2021 9:47 AM
NOTE: DIMENSIONAL DATA IS NOT TO BE OBTAINED BY SCALING ANY PORTION OF THIS DRAWING.

PLOT DATE 11/30/2021 9:48 AM
P:\N0430020_NEW BERLIN - WESTRIDGE LIFT STATION REHA\DESIGN\CAD\SHEETS\07-STRUCTURAL\S-PLAN.DWG ISAAC W. DOLAN SAVE TIME 11/29/2021 1:00:03 PM

DOOR SCHEDULE

DOOR FRAMES

THERMAL BROKEN FRP FRAME

DOOR TYPES

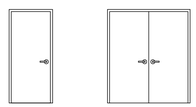

A: INSULATED FRP THERMAL BROKEN
B: INSULATED FRP THERMAL BROKEN

MARK	TYPE	LOCATION	SIZE W x H	FRAME	HARDWARE 1	2	3	4	5	6	NOTES
101	A	PIPING ROOM EXTERIOR	3-0 x 7-0	A	X	X		X	X	X	
102	A	GENERATOR ROOM	3-0 x 7-0	A	X	X		X	X	X	
103	B	GENERATOR ROOM EXT.	5-8 x 7-0	A	X	X		X	X	X	PANIC BAR ON ACTIVE LEAF

NOTES

1. PROVIDE WEATHER STRIPPING AT ALL EXTERIOR DOORS.
2. PROVIDE ALUMINUM THREASHOLDS AT EXTERIOR DOORS, ½" HIGH MAXIMUM.
3. ALL DOORS AND FRAMES (NOT INCLUDING OVERHEAD DOOR) SHALL BE FIBER REINFORCED PLASTIC (FRP).
4. DR = DOOR SIZE (INSIDE DIMENSION)

HARDWARE

1. LOCK
2. CLOSER WITH HOLD-OPEN LOCK
3. PUSH/PULL
4. PANIC BAR
5. KICKPLATE
6. WEATHERSTRIPPING AND SILL SWEEP

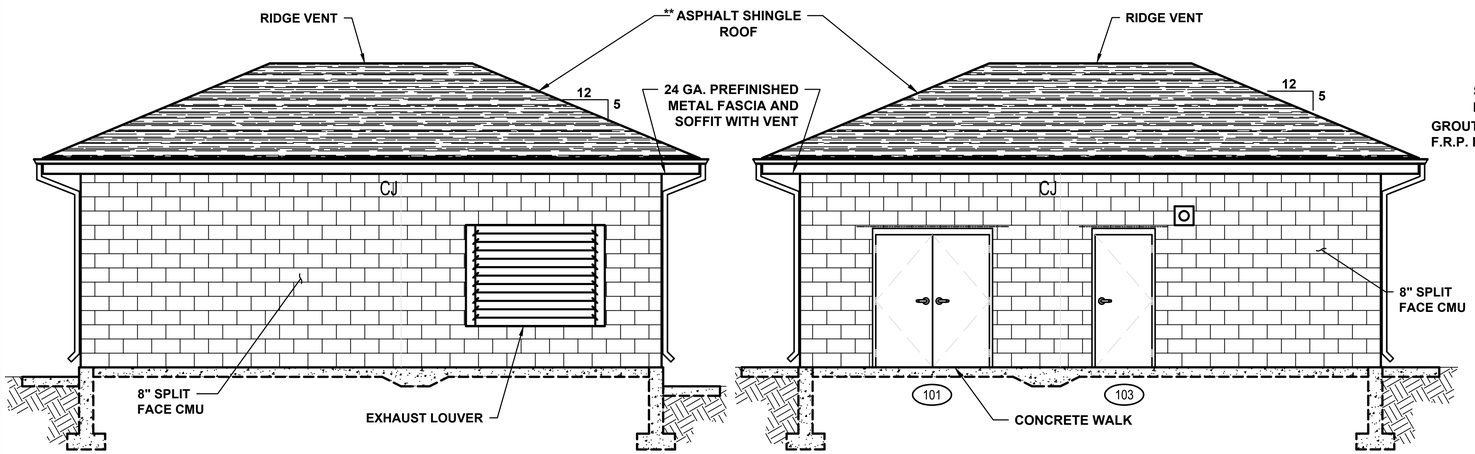

NORTH ELEVATION

0 1' 2' 4' 8'
SCALE 1/4" = 1'

** ALTERNATE BID ITEM: STANDING SEAM METAL ROOF OVER SELF-ADHERED ICE & WATER SHIELD.

SOUTH ELEVATION

0 1' 2' 4' 8'
SCALE 1/4" = 1'

* TOP COURSE SHALL HAVE SMOOTH FACE OF SAME COLOR AS SPLIT-FACED BLOCK

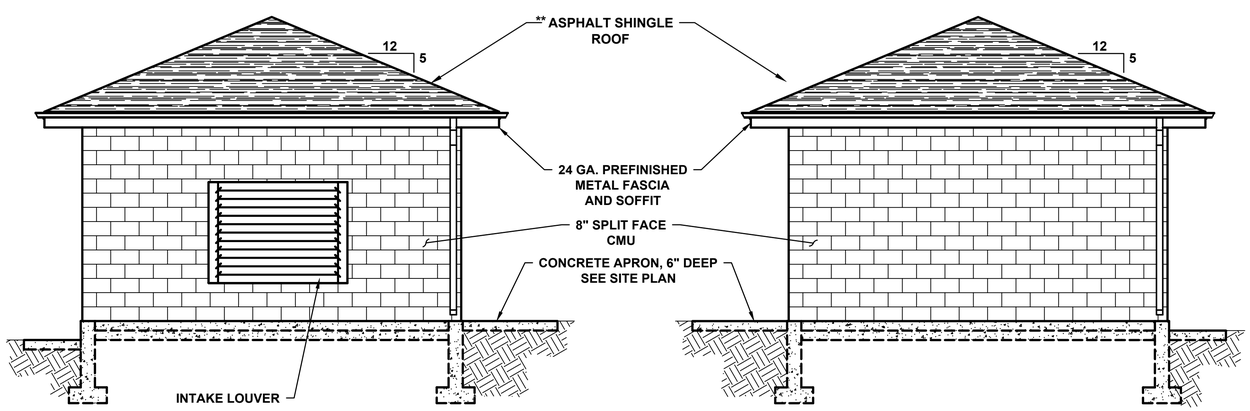

WEST ELEVATION

0 1' 2' 4' 8'
SCALE 1/4" = 1'

EAST ELEVATION

0 1' 2' 4' 8'
SCALE 1/4" = 1'

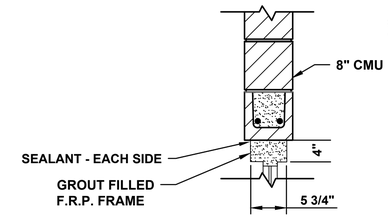

INTERIOR DOOR HEAD DTL

0 1' 2'
SCALE 1" = 1'

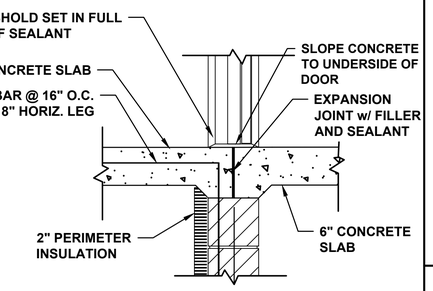

EXTERIOR DOOR SILL DTL

0 1' 2'
SCALE 1" = 1'

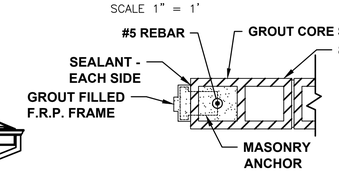

INTERIOR DOOR JAMB DTL

0 1' 2'
SCALE 1" = 1'

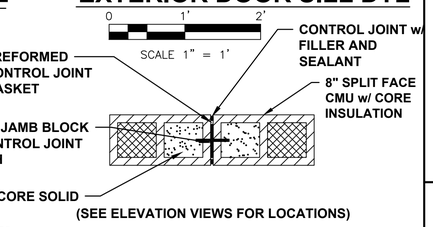

(SEE ELEVATION VIEWS FOR LOCATIONS)

CONTROL JOINT DTL

0 1' 2'
SCALE 1" = 1'

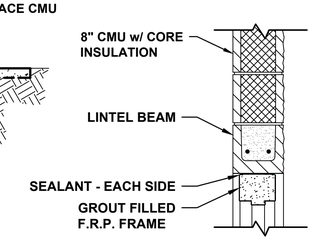

EXTERIOR DOOR HEAD DTL

0 1' 2'
SCALE 1" = 1'

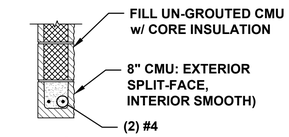

L1

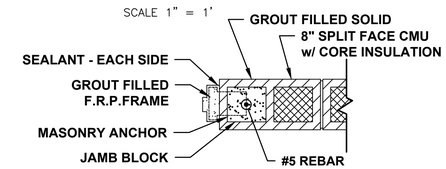

EXTERIOR DOOR JAMB DTL

0 1' 2'
SCALE 1" = 1'

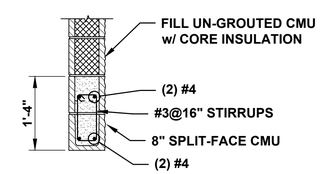

L2

LINTEL DETAILS

0 1' 2' 3'
SCALE 3/4" = 1'

ClarkDietz
500 N. 3RD STREET
SUITE 275
WAUSAU, WI 54403
PHONE : 715.845.1333 www.clarkdietz.com

90% SUBMITTAL
NOT FOR CONSTRUCTION

PROJECT TITLE
CITY OF NEW BERLIN
WESTRIDGE LIFT STATION REHABILITATION
WAUKESHA COUNTY, WI

DESIGNED BY: DLT
DRAWN BY: IWD
CHECKED BY: TSW
DATE CHECKED: 11/23/21

DATE	REVISION
11/29/21	90% SET
09/30/21	50% SET

DRAWING TITLE
STRUCTURAL ELEVATION PLAN

PROJECT No.
N0430020

DRAWING No.
S-102

DWG 12 OF 31 DWGS

NOTE: DIMENSIONAL DATA IS NOT TO BE OBTAINED BY SCALING ANY PORTION OF THIS DRAWING.

PLOT DATE 11/30/2021 9:49 AM
P:\N0430020_NEW BERLIN - WESTRIDGE LIFT STATION REHA\DESIGN\CAD\SHEETS\07-STRUCTURAL\S-PLAN.DWG ISAAC W. DOLAN SAVE TIME 11/29/2021 1:00:03 PM

** ALTERNATE BID ITEM
STANDING SEAM METAL ROOF OVER SELF-ADHERED ICE & WATER SHIELD.

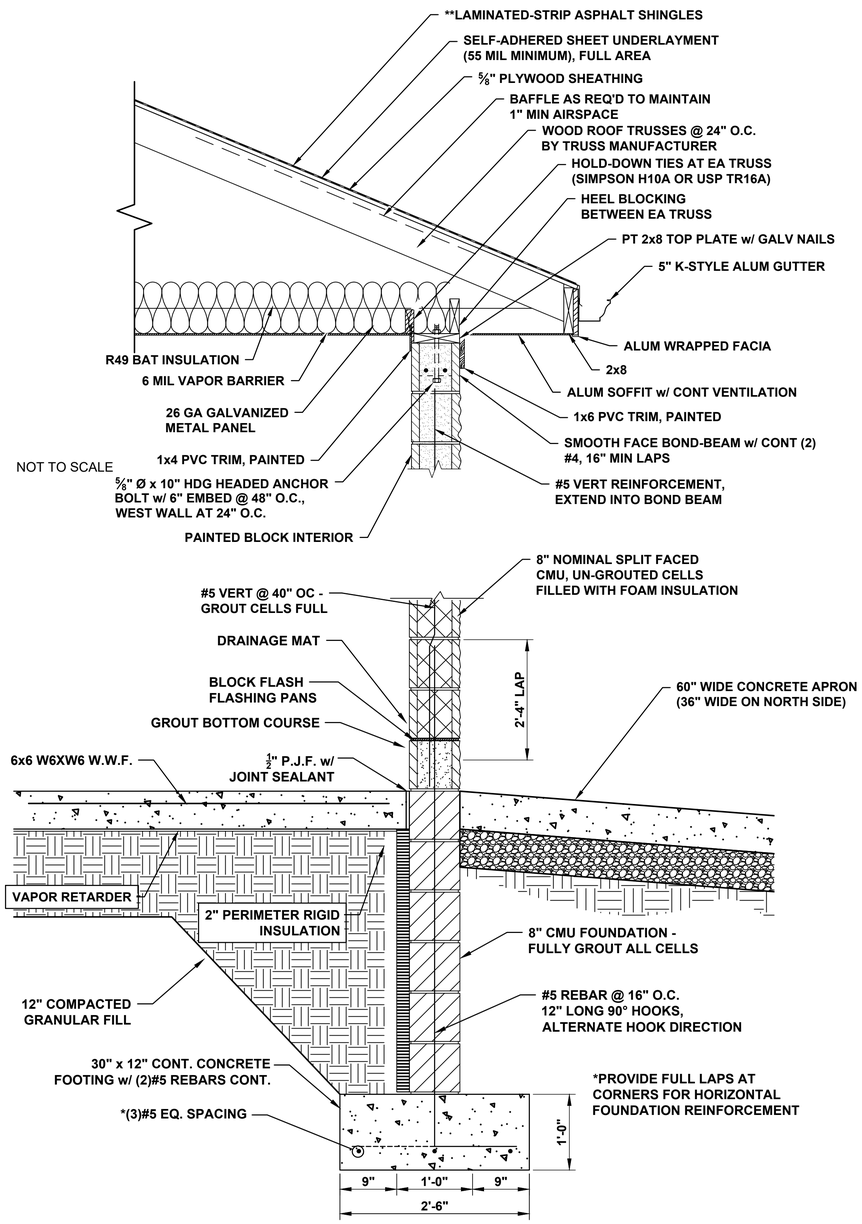

TYP. WALL SECTION

0 1' 2'
SCALE 1" = 1'

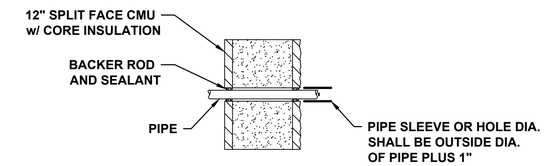

TYPICAL SLEEVE @ BLOCK WALL

0 1' 2'
SCALE 1" = 1'

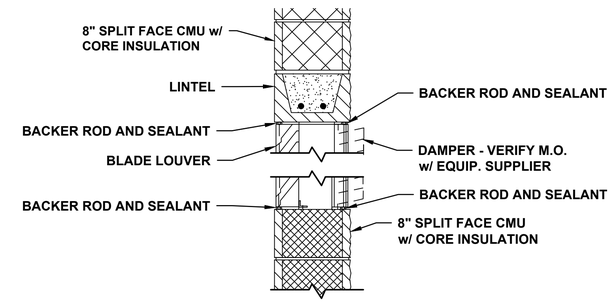

LOUVER DETAIL

0 1' 2'
SCALE 1" = 1'

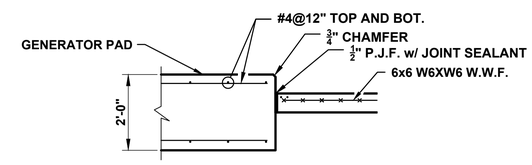

GENERATOR PAD DETAIL

0 1' 2' 4'
SCALE 1/2" = 1'

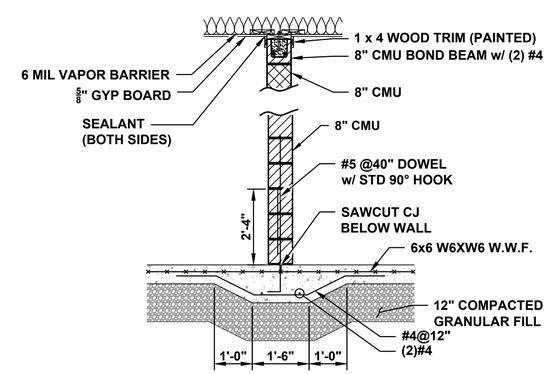

PARTITION INTERIOR WALL SECTION

0 1' 2' 4'
SCALE 1/2" = 1'

ClarkDietz
500 N. 3RD STREET
SUITE 200
WAUSAU, WI 54403
PHONE : 715.845.1333 www.clarkdietz.com

90% SUBMITTAL
NOT FOR CONSTRUCTION

PROJECT TITLE
CITY OF NEW BERLIN
WESTRIDGE LIFT STATION REHABILITATION
WAUKESHA COUNTY, WI

DESIGNED BY:	DLT
DRAWN BY:	IWD
CHECKED BY:	TSW
DATE CHECKED:	11/23/21

DATE	REVISION
11/29/21	90% SET
09/30/21	50% SET

DRAWING TITLE
STRUCTURAL SECTION PLAN

PROJECT No.
N0430020

DRAWING No.
S-103

DWG 13 OF 31 DWGS

NOTE: DIMENSIONAL DATA IS NOT TO BE OBTAINED BY SCALING ANY PORTION OF THIS DRAWING.

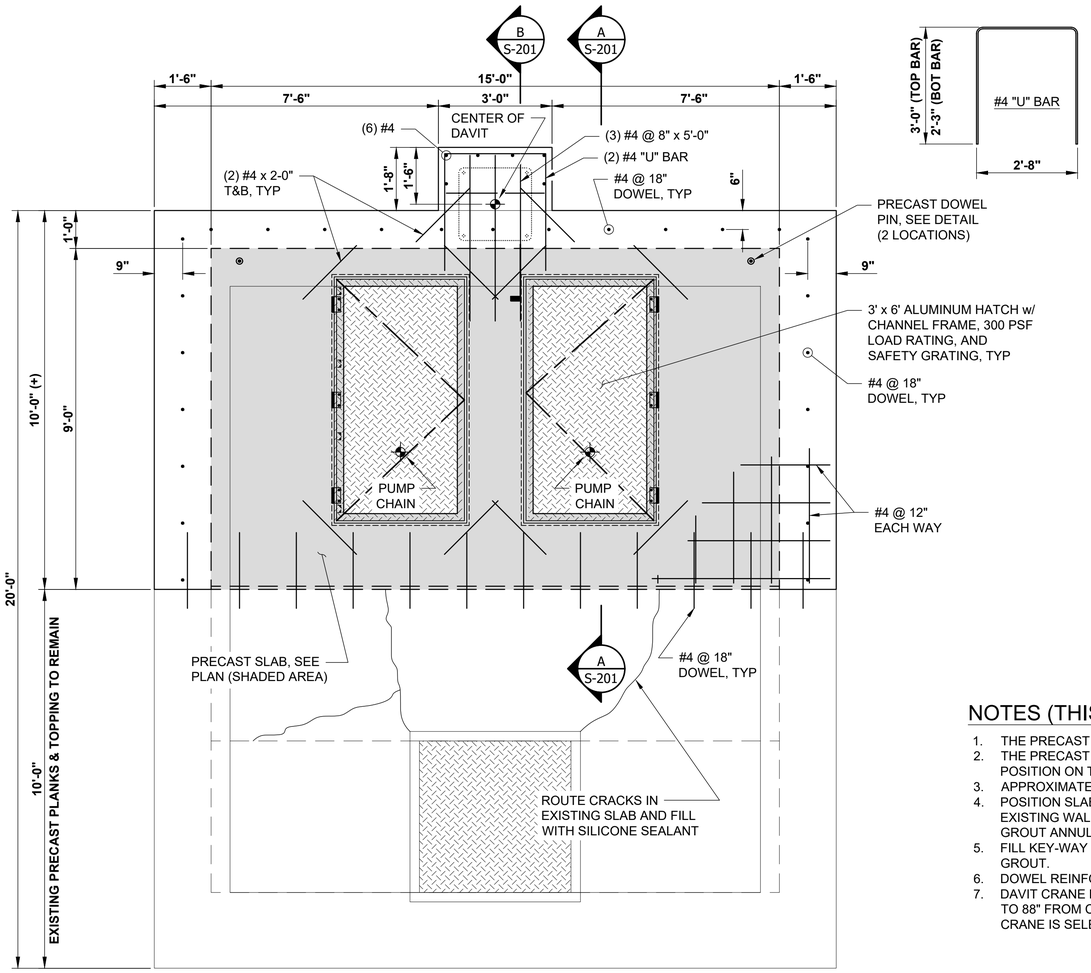

WET WELL COVER

0 1' 2' 4'

SCALE 1/2" = 1'

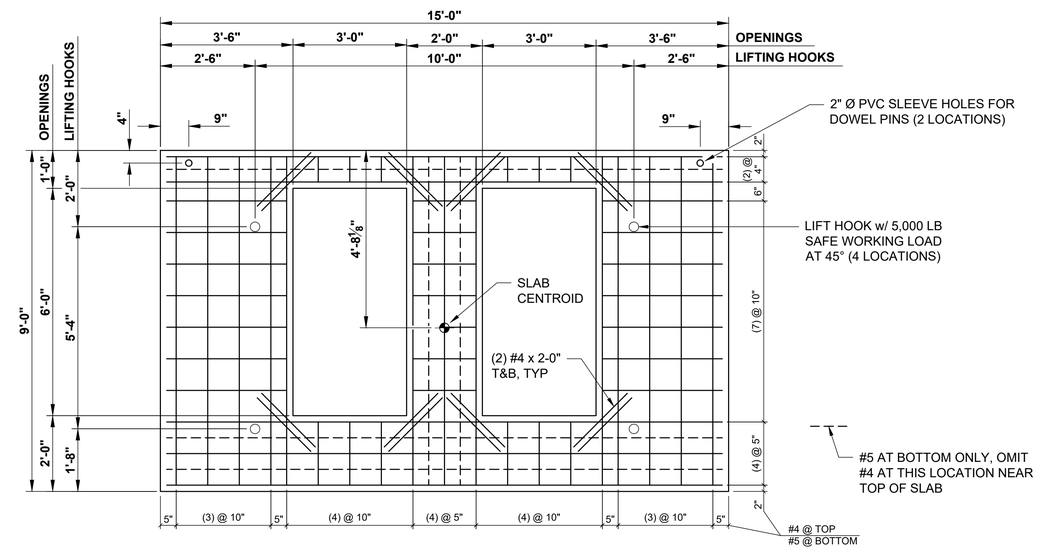

DETAIL - PRECAST SLAB

(PLAN VIEW)

NOTES (THIS DRAWING)

1. THE PRECAST SLAB AND CONCRETE TOPPING IS DESIGNED TO SUPPORT 300 PSF LIVE LOAD.
2. THE PRECAST SLAB MAY BE CAST ON-SITE USING CLASS A CONCRETE AND MOVED INTO POSITION ON THE WET-WELL.
3. APPROXIMATE WEIGHT OF PRECAST SLAB = 9,900 LBS.
4. POSITION SLAB TO ABUT THE EXISTING PRECAST PLANK. AFTER POSITIONING DRILL TOP OF EXISTING WALL AND INSTALL (2) EPOXY EMBEDDED DOWELS THROUGH HOLES IN PRECAST SLAB. GROUT ANNULAR SPACE AROUND BAR WITH NON-SHRINK GROUT.
5. FILL KEY-WAY BETWEEN PRECAST PLANK AND EXISTING PRECAST PLANK WITH NON-SHRINK GROUT.
6. DOWEL REINFORCING BARS INTO EXISTING CONCRETE WALLS AND TOPPING AS SHOWN.
7. DAVIT CRANE LOCATION IS BASED ON MODEL CAPTAIN 2500 BY THERN WITH A DISTANCE OF 80" TO 88" FROM CENTER OF CRANE TO PUMP CHAIN. NOTIFY ENGINEER IF DIFFERENT MODEL OF CRANE IS SELECTED AS LOCATION OF DAVIT CRANE MAY NEED TO BE REVISED.

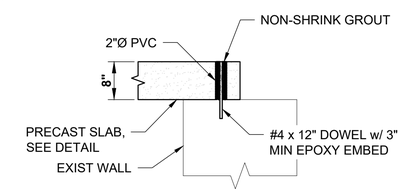

PIN DETAIL

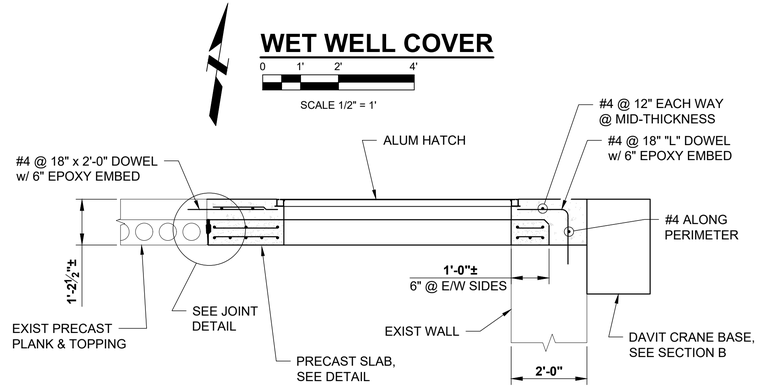

SECTION A-A

0 1' 2' 4'

SCALE 1/2" = 1'

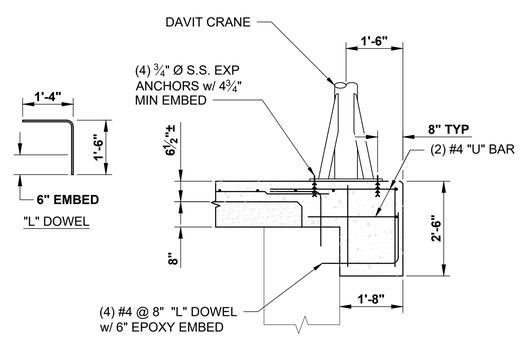

SECTION B

0 1' 2' 4'

SCALE 1/2" = 1'

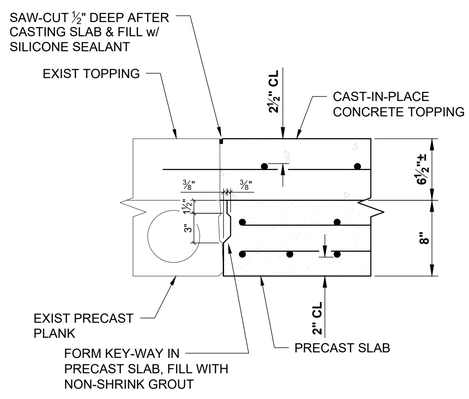

JOINT DETAIL

ClarkDietz
500 N. 3RD STREET
SUITE 270
WAUSAU, WI 54403
PHONE : 715.845.1333 www.clarkdietz.com

90% SUBMITTAL
NOT FOR CONSTRUCTION

PROJECT TITLE
CITY OF NEW BERLIN
WESTRIDGE LIFT STATION REHABILITATION
WAUKESHA COUNTY, WI

DESIGNED BY:	SMM
DRAWN BY:	SMM
CHECKED BY:	TSW
DATE CHECKED:	11/23/21

DATE	REVISION
11/29/21	90% SET
09/30/21	50% SET

DRAWING TITLE
WET WELL COVER STRUCTURAL DETAILS

PROJECT No.
N0430020

DRAWING No.
S-201

DWG 14 OF 31 DWGS

NOTE: DIMENSIONAL DATA IS NOT TO BE OBTAINED BY SCALING ANY PORTION OF THIS DRAWING.

PLOT DATE 11/30/2021 9:49 AM
P:\N0430020_NEW BERLIN - WESTRIDGE LIFT STATION REHA\DESIGN\CAD\SHEETS\07-STRUCTURAL\S-PLAN.DWG ISAAC W. DOLAN SAVE TIME 11/29/2021 1:00:03 PM

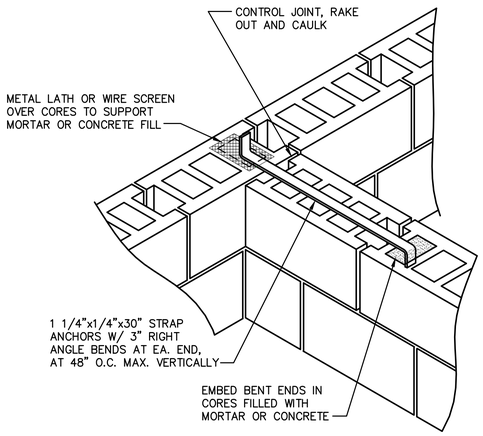

WALL TO WALL ANCHORAGE INTERSECTION OF BEARING WALLS

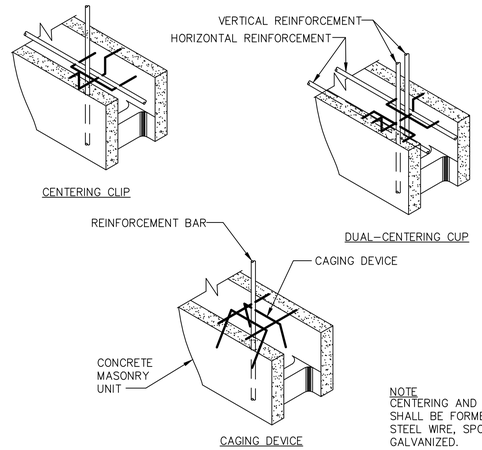

NOTE
CENTERING AND CAGING DEVICES SHALL BE FORMED FROM #9 HARD STEEL WIRE, SPOT WELDED AND GALVANIZED.

CENTERING AND CAGING DEVICES

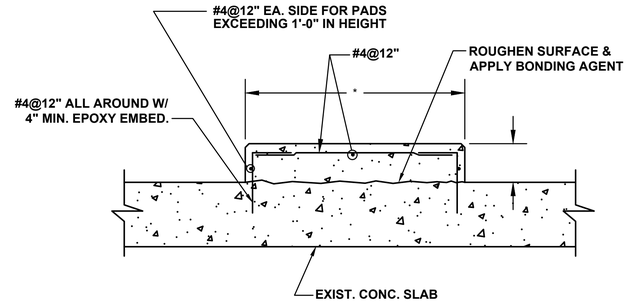

* PAD SIZE TO BE DETERMINED FROM EQUIPMENT MANUFACTURER'S APPROVED SHOP DRAWINGS.

HOUSE KEEPING PAD

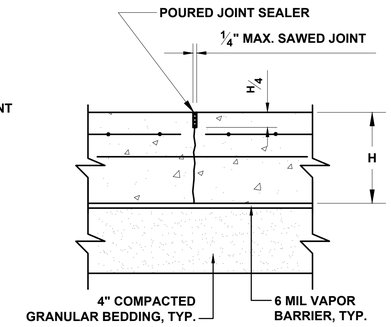

NOTE: AT THE CONTRACTOR'S OPTION "STRESS LOCK" PLASTIC CONTROL JOINT OR APPROVED EQUAL MAY BE USED INSTEAD OF SAWED JOINT.

CONTRACTION JOINT IN SLABS

SLAB THICKNESS	DOWEL DIA. AND LENGTH	DOWEL SPACING
5"-6"	3/4"Ø x 16"	12"
7"-8"	1"Ø x 18"	12"
9"-11"	1 1/4"Ø x18"	12"
12"	1 3/8"Ø x 18"	12"

SLAB ON GRADE JOINT DETAILS

FOR BUILDING SLAB ONLY.

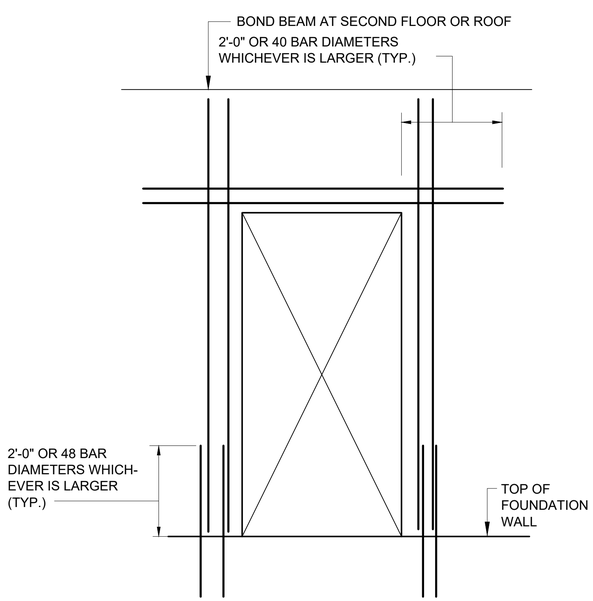

REINFORCEMENT AROUND DOOR OPENING IN C.M.U.

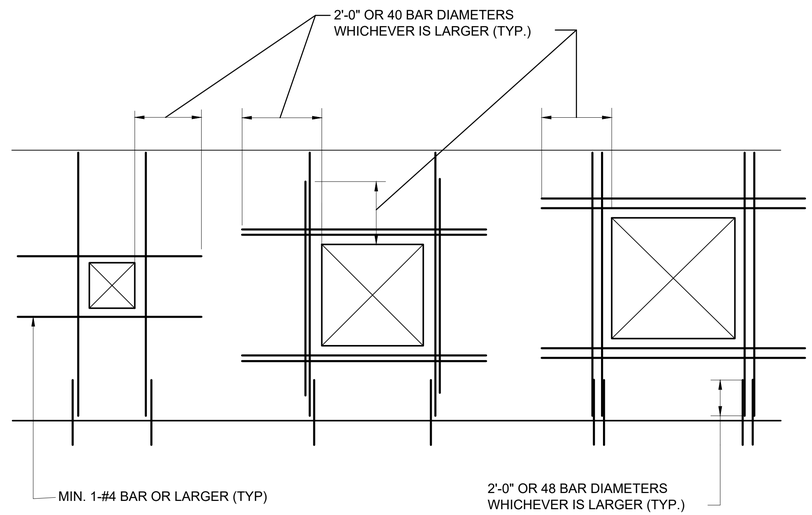

CASE 1
APPLIES TO (1) ALL OPENINGS 16" OR LARGER IN EITHER DIRECTION IN NON-STRUCTURAL PARTITIONS AND (2) ANY OPENING 16" TO 24" IN EITHER DIRECTION IN STRUCTURAL PARTITION OR EXTERIOR WALL

CASE 2
APPLIES TO STRUCTURAL PARTITION AND EXTERIOR WALLS WHEN OPENING EXCEEDS 2' BUT NOT MORE THAN 4' IN EITHER DIRECTION.

CASE 3
APPLIES TO STRUCTURAL PARTITION AND EXTERIOR WALLS WHEN OPENING EXCEEDS 4' IN EITHER DIRECTION.

NOTES:

1. FOR VERTICAL REINFORCEMENT OF BARS, EA. BAR SHALL BE PLACED IN A SEPARATE CELL.
2. VERTICAL BARS SHALL BE BARS OF THE SAME SIZE, EXTENT, AND ANCHORAGE AS THE TYPICAL REINFORCEMENT IN THAT WALL UNLESS OTHERWISE NOTED.
3. VERTICAL REINFORCEMENT BARS CAN BE PART OF THE NORMAL VERTICAL REINFORCEMENT.

REINFORCEMENT AROUND WALL OPENINGS IN C.M.U.

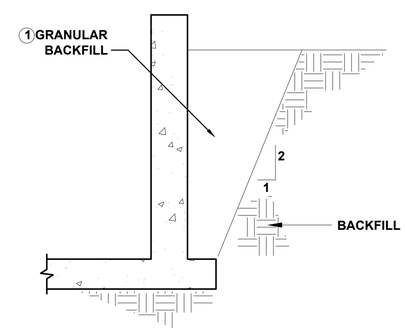

BACKFILL DETAIL

TYPICAL ALL STRUCTURES UNLESS SHOWN OTHERWISE

1 COMPACT TO 95% DENSITY (ASTM D698) IF PAVEMENT OR STRUCTURE IS PLACED ON OR OVER GRANULAR BACKFILL. 90% DENSITY (ASTM D698) IS SUITABLE FOR LANDSCAPED AREAS.

ClarkDietz
500 N. 3RD STREET
SUITE 270
WAUSAU, WI 54403
PHONE : 715.845.1333 www.clarkdietz.com

90% SUBMITTAL
NOT FOR CONSTRUCTION

PROJECT TITLE
CITY OF NEW BERLIN
WESTRIDGE LIFT STATION REHABILITATION
WAUKESHA COUNTY, WI

DESIGNED BY: DLT
DRAWN BY: IWD
CHECKED BY: TSW
DATE CHECKED: 11/23/21

DATE	REVISION
11/29/21	90% SET
09/30/21	50% SET

DRAWING TITLE
STRUCTURAL DETAILS

PROJECT No.
N0430020

DRAWING No.
S-501

DWG 15 OF 31 DWGS

NOTE: DIMENSIONAL DATA IS NOT TO BE OBTAINED BY SCALING ANY PORTION OF THIS DRAWING.

P:\N0430020_NEW BERLIN - WESTRIDGE LIFT STATION REHA\DESIGN\CAD\SHEETS\07-STRUCTURAL\S-DETAILS.DWG ISAAC W. DOLAN SAVE TIME 11/29/2021 11:16:57 AM PLOT DATE 11/30/2021 9:49 AM

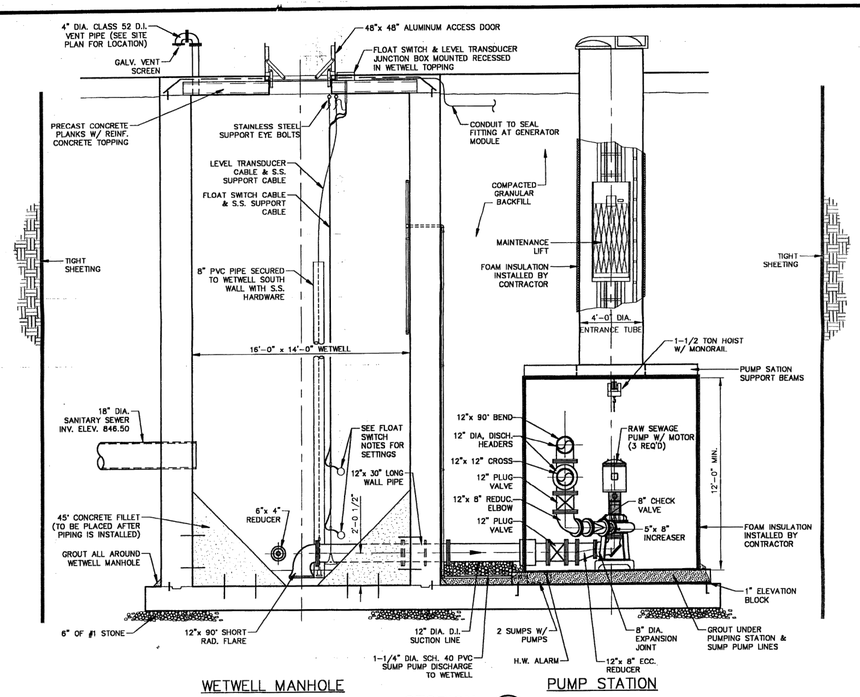

SECTION 1/2
SCALE: 1/4"=1'-0"
CWRPSEC1

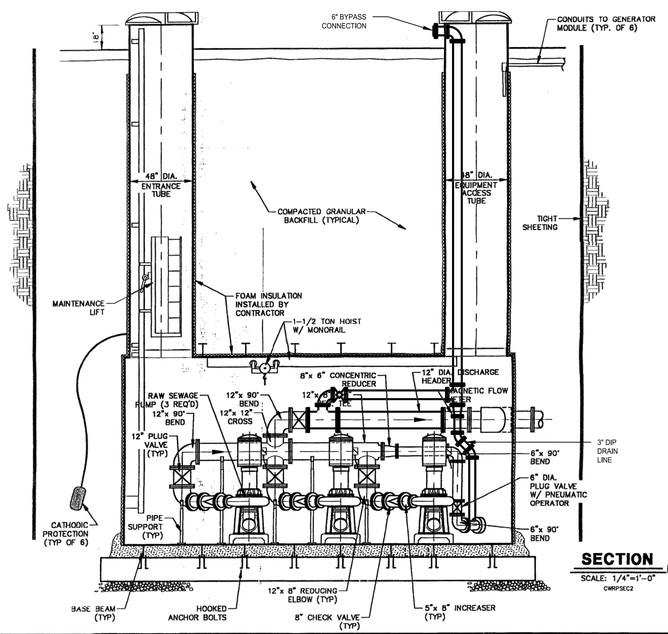

SECTION 2/2
SCALE: 1/4"=1'-0"
CWRPSEC2

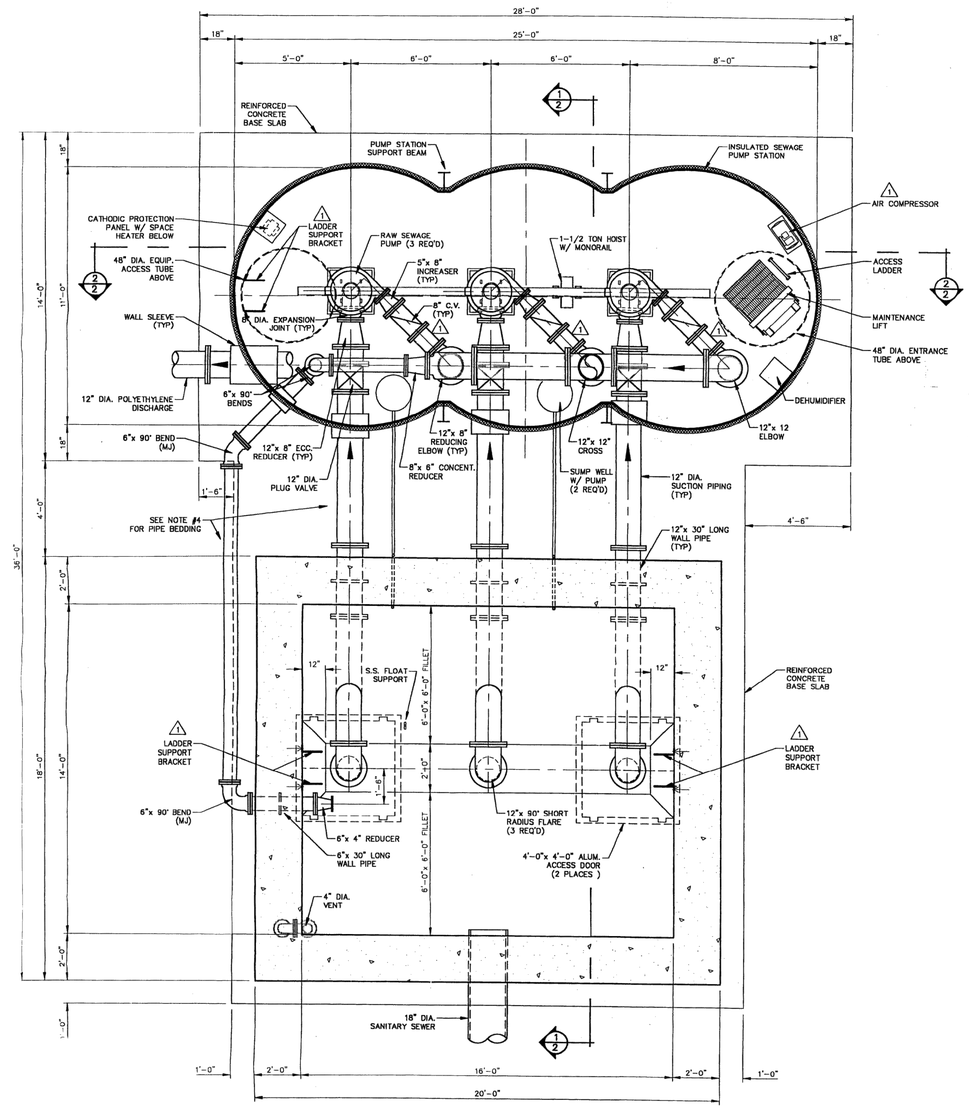

SEWAGE PUMP STATION AND WETWELL
SCALE: 3/8"=1'-0"
CPSWWPLN

NOTES:

1) ALL HARDWARE IN WETWELL SHALL BE STAINLESS STEEL.
2) SOME PIPING AND EQUIPMENT HAVE BEEN SHOWN OUT OF POSITION FOR CLARITY, SEE PLAN VIEW FOR ACTUAL POSITION.
3) BACKFILL WITH COMPACTED GRANULAR BACKFILL IN 12" LIFTS (MAXIMUM).
4) SUPPORT PIPES ON #1 CRUSHED STONE.

FLOAT SWITCH ELEVATIONS

"FLT1" HIGH WATER ALARM/ _ _ _ ELEV. 846.50
BACKUP PUMP ON

"FLT2" LOW WATER ALARM/ _ _ _ ELEV. 842.50
BACKUP PUMP OFF

1	09-23-94	ADD AIR COMPRESSOR
		ADD LADDER SUPPORT BRACKETS
		ADD SPOOL TO DISCHARGE PIPING
		REVISIONS

Ruekert | Mielke
Professional Engineers
Registered Land Surveyors
N239 N1812 Rockwood Drive
Waukesha, Wisconsin 53188 (414) 542-5733

SEWAGE PUMP STATION
PLAN AND SECTIONS
WESTRIDGE SEWAGE PUMP STATION
CITY OF NEW BERLIN
WAUKESHA COUNTY, WISCONSIN

© COPYRIGHT 1994
RUEKERT & MIELKE INC.

DESIGNED BY: T.R.R.
DRAFTED BY: J.M.C.
CHECKED BY:
DATE: AUGUST, 1994
SCALE: AS NOTED

PROJECT NO. 14-90166.05 0
CWRPSH11

SHEET NO. 2 OF 6

9-26-94

ENT'D

Clark Dietz
500 N. 3RD STREET
SUITE 700
WAUSAU, WI 54403
PHONE : 715.845.1333 www.clarkdietz.com

90% SUBMITTAL
NOT FOR CONSTRUCTION

PROJECT TITLE
CITY OF NEW BERLIN
WESTRIDGE LIFT STATION
REHABILITATION
WAUKESHA COUNTY, WI

DESIGNED BY: DLT
DRAWN BY: IWD
CHECKED BY: TSW
DATE CHECKED: 11/23/21

DATE	REVISION
11/29/21	90% SET
09/30/21	50% SET

DRAWING TITLE
EXISTING LIFT STATION AND WET WELL SECTIONS

PROJECT No.
N0430020

DRAWING No.
M-101

DWG 16 OF 31 DWGS

NOTE: DIMENSIONAL DATA IS NOT TO BE OBTAINED BY SCALING ANY PORTION OF THIS DRAWING.

P:\N0430020_NEW BERLIN - WESTRIDGE LIFT STATION REHA\DESIGN\CAD\SHEETS\14-MECHANICAL\M-SECTIONS.DWG ISAAC W. DOLAN SAVE TIME 11/30/2021 9:34:06 AM PLOT DATE 11/30/2021 9:49 AM

PIPING SCHEDULE*

	DESCRIPTION	DIAMETER (IN)	LENGTH (IN) (VERIFY)	REMARKS
1	SPOOL	12	---	VERTICAL LINE FROM WET WELL PIPING
2	90° BEND	12	12.00	PRESSURE GAUGE WITH TAP
3	CHECK VALVE	12	27.50	---
4	PLUG VALVE	12	14.00	---
5	90° BEND	12	12.00	---
6	EXPANSION JOINT	12	8.00	WITH 2 CONTROL RODS AND GUSSET PLATES
7	TEE	12	24.00	WITH AIR RELEASE ASSEMBLY
8	PLUG VALVE	12	14.00	---
9	SPOOL	12	108.00	THROUGH BUILDING WALL WITH SLEEVE
10	BLIND FLANGE	12	---	WITH 4-INCH TAP AND QUICK CONNECT CAP
11	EXPANSION JOINT	12	8.00	WITH 2 CONTROL RODS AND GUSSET PLATES
12	TEE	12	24.00	---
13	PLUG VALVE	12	14.00	---
14	CHECK VALVE	12	27.50	---
15	90° BEND	12	12.00	PRESSURE GAUGE WITH TAP
16	SPOOL	12	6.00	VERTICAL LINE FROM WET WELL PIPING
17	EXPANSION JOINT	12	8.00	WITH 2 CONTROL RODS AND GUSSET PLATES
18	90° BEND	12	12.00	PRESSURE GAUGE WITH TAP
19	SPOOL	12	12.00	---
20	MAG METER	12	19.70	---
21	90° BEND	12	12.00	PRESSURE GAUGE WITH TAP
22	PLUG VALVE	12	14.00	---
23	SPOOL	12	---	VERTICAL LINE TO FORCE MAIN DISCHARGE

* THIS LISTING IS INTENDED TO BE A GENERAL PIPE AND VALVE LISTING. ANY OMISSION FROM THIS LISTING OF ANY PIPES AND VALVES SHOWN ON THE CONTRACT DRAWINGS OR THAT MAY BE REASONABLY REQUIRED FOR A COMPLETE OPERATING FACILITY DOES NOT RELIEVE THE CONTRACTOR OF THE RESPONSIBILITY TO FURNISH THESE ITEMS.

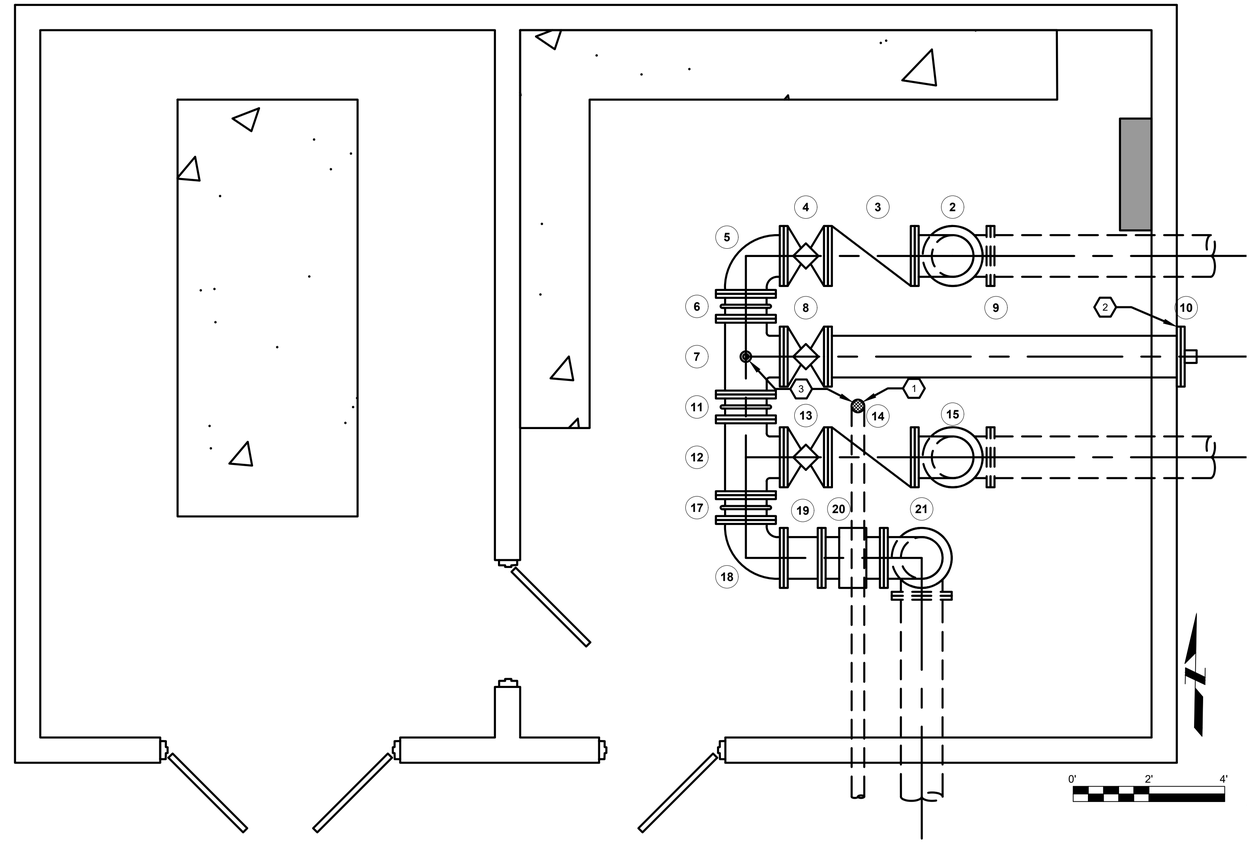

INTERIOR PIPING PLAN VIEW

GENERAL NOTES

A. ALL PIPE SUPPORTS ARE NOT SHOWN FOR CLARITY. CONTRACTOR SHALL SUPPORT PIPES AS REQUIRED PER THE MANUFACTURER'S RECOMMENDATIONS AND PER THE TECHNICAL SPECIFICATIONS.

B. ALL INTERIOR PIPE AND FITTINGS SHALL BE FLANGED DUCTILE IRON, COATED AS SPECIFIED. FASTENING BOLTS AND NUTS SHALL BE STAINLESS STEEL.

C. SEE SPECIFICATIONS FOR PIPE FITTING AND VALVE DETAILS.

KEY NOTES

1. FLOOR DRAIN WITH VENT. PLUMB TO WET WELL.
2. EXTEND SPOOL THROUGH BUILDING WALL SO CONNECTOR IS ON EXTERIOR OF BUILDING. SEAL PIPE PENETRATION.
3. PLUMB AIR RELEASE VALVE DISCHARGE TO FLOOR DRAIN.
4. INSTALL AIR CONDITIONER.

ClarkDietz
500 N. 3RD STREET
SUITE 200
WAUSAU, WI 54403
PHONE : 715.845.1333 www.clarkdietz.com

90% SUBMITTAL
NOT FOR CONSTRUCTION

PROJECT TITLE
CITY OF NEW BERLIN
WESTRIDGE LIFT STATION REHABILITATION
WAUKESHA COUNTY, WI

DESIGNED BY: DLT
DRAWN BY: IWD
CHECKED BY: TSW
DATE CHECKED: 11/23/21

DATE	REVISION
11/29/21	90% SET
09/30/21	50% SET

DRAWING TITLE
LIFT STATION PIPING PLAN

PROJECT No.
N0430020

DRAWING No.
M-102

DWG 17 OF 31 DWGS

NOTE: DIMENSIONAL DATA IS NOT TO BE OBTAINED BY SCALING ANY PORTION OF THIS DRAWING.

PLOT DATE 11/30/2021 9:50 AM
P:\N0430020_NEW BERLIN - WESTRIDGE LIFT STATION REHA\DESIGN\CAD\SHEETS\14-MECHANICAL\M-PLAN-PROCESSPIPING.DWG ISAAC W. DOLAN SAVE TIME 11/29/2021 11:17:15 AM

PLOT DATE 11/30/2021 9:50 AM
P:\N0430020_NEW BERLIN - WESTRIDGE LIFT STATION REHA\DESIGN\CAD\SHEETS\14-MECHANICAL\M-SECTIONS.DWG ISAAC W. DOLAN SAVE TIME 11/30/2021 9:34:06 AM

ATTACH TO OUTSIDE OF WET WELL COVER

CAUTION
DANGEROUS/HAZARDOUS GASES
LEVEL 2 CONFINED SPACE
DO NOT ENTER WITHOUT
PROPER EQUIPMENT AND
SUPERVISION

EXAMPLE OF WARNING LABEL

10" X 14" LABEL, BLACK LETTERS
(1 INCH) ON YELLOW BACKGROUND

PIPING SCHEDULE*

	DESCRIPTION	DIAMETER (IN)	LENGTH (IN) (VERIFY)	REMARKS
1	SPOOL	12	---	VERTICAL LINE FROM WET WELL PIPING
2	90° BEND	12	12.00	PRESSURE GAUGE WITH TAP
3	CHECK VALVE	12	27.50	---
4	PLUG VALVE	12	14.00	---
5	90° BEND	12	12.00	---
6	EXPANSION JOINT	12	8.00	WITH 2 CONTROL RODS AND GUSSET PLATES
7	TEE	12	24.00	WITH AIR RELEASE ASSEMBLY
8	PLUG VALVE	12	14.00	---
9	SPOOL	12	108.00	THROUGH BUILDING WALL WITH SLEEVE
10	BLIND FLANGE	12	---	WITH 4-INCH TAP AND QUICK CONNECT CAP
11	EXPANSION JOINT	12	8.00	WITH 2 CONTROL RODS AND GUSSET PLATES
12	TEE	12	24.00	---
13	PLUG VALVE	12	14.00	---
14	CHECK VALVE	12	27.50	---
15	90° BEND	12	12.00	PRESSURE GAUGE WITH TAP
16	SPOOL	12	6.00	VERTICAL LINE FROM WET WELL PIPING
17	EXPANSION JOINT	12	8.00	WITH 2 CONTROL RODS AND GUSSET PLATES
18	90° BEND	12	12.00	PRESSURE GAUGE WITH TAP
19	SPOOL	12	12.00	---
20	MAG METER	12	19.70	---
21	90° BEND	12	12.00	PRESSURE GAUGE WITH TAP
22	PLUG VALVE	12	14.00	---
23	SPOOL	12	---	VERTICAL LINE TO FORCE MAIN DISCHARGE

* THIS LISTING IS INTENDED TO BE A GENERAL PIPE AND VALVE LISTING. ANY OMISSION FROM THIS LISTING OF ANY PIPES AND VALVES SHOWN ON THE CONTRACT DRAWINGS OR THAT MAY BE REASONABLY REQUIRED FOR A COMPLETE OPERATING FACILITY DOES NOT RELIEVE THE CONTRACTOR OF THE RESPONSIBILITY TO FURNISH THESE ITEMS.

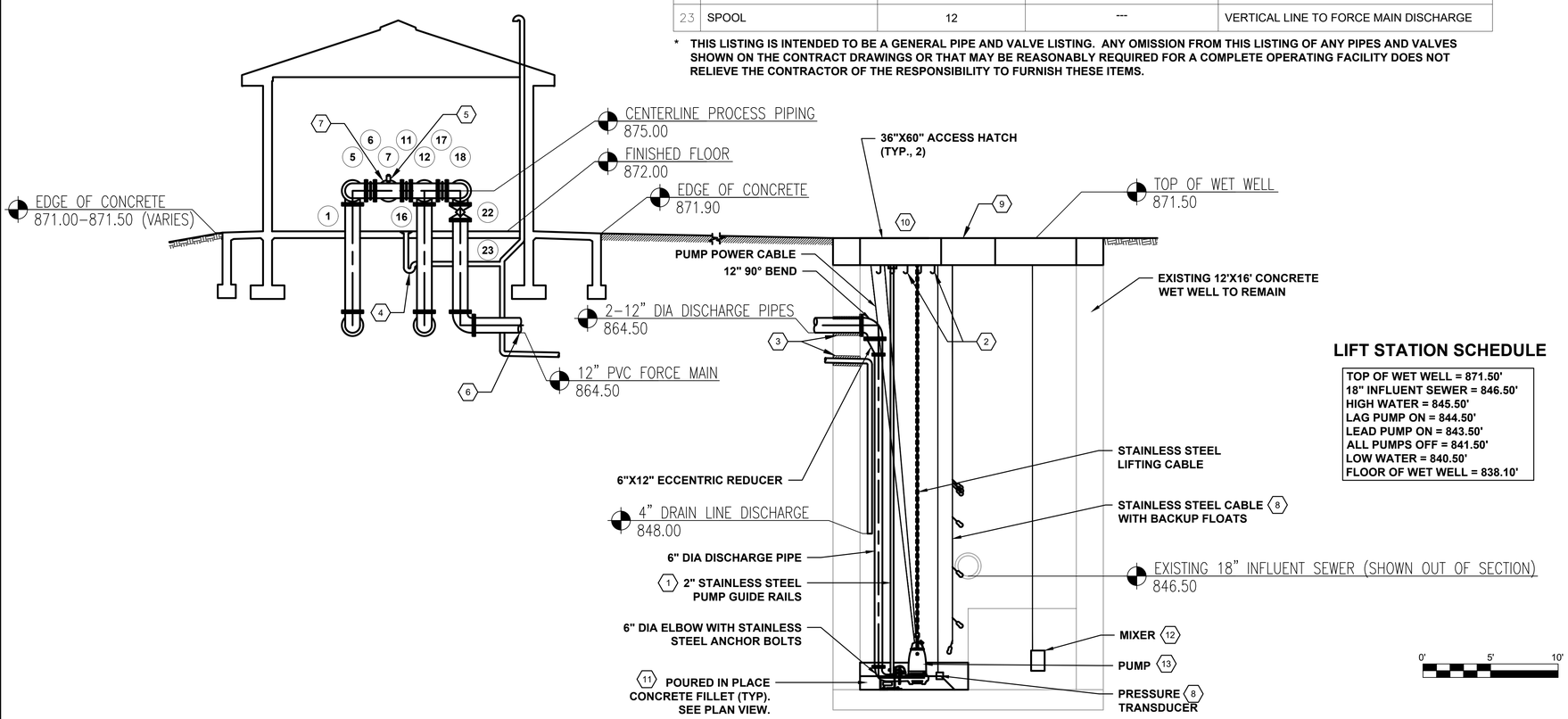

LIFT STATION SCHEDULE

TOP OF WET WELL = 871.50'
18" INFLUENT SEWER = 846.50'
HIGH WATER = 845.50'
LAG PUMP ON = 844.50'
LEAD PUMP ON = 843.50'
ALL PUMPS OFF = 841.50'
LOW WATER = 840.50'
FLOOR OF WET WELL = 838.10'

GENERAL NOTES

A. ALL PIPE SUPPORTS ARE NOT SHOWN FOR CLARITY. CONTRACTOR SHALL SUPPORT PIPES AS REQUIRED PER THE MANUFACTURER'S RECOMMENDATIONS AND PER THE TECHNICAL SPECIFICATIONS.

B. ALL INTERIOR PIPE AND FITTINGS SHALL BE FLANGED DUCTILE IRON, COATED AS SPECIFIED. FASTENING BOLTS AND NUTS SHALL BE STAINLESS STEEL.

C. SEE SPECIFICATIONS FOR PIPE FITTING AND VALVE DETAILS.

D. ALL PIPING AND GUIDE RAILS IN THE WET WELL SHALL BE PROVIDED BY THE CONTRACTOR.

E. TRANSDUCER AND FLOAT CABLES SHALL BE ACCESSIBLE FROM HATCH WITHOUT ENTRY INTO WET WELL.

KEY NOTES

1. INSTALL INTERMEDIATE GUIDE RAIL BRACKETS AS RECOMMENDED BY MANUFACTURER.
2. INSTALL TEN (10) CABLE MOUNTING HOOKS AT EACH ACCESS HATCH.
3. PROVIDE MODULAR ELASTOMER SEAL (LINK SEALS OR APPROVED EQUAL) AT ALL PIPE PENETRATION LOCATIONS IN WET WELL AND THROUGH CONCRETE FLOOR (TYP.).
4. CONSTRUCT FLOOR DRAIN IN ACCORDANCE WITH STATE OF WISCONSIN PUMBING CODE. PLACE 4-INCH DRAIN IN THE CENTER OF THE MECHANICAL ROOM WITH VENT AND DRAIN PIPE. DRAIN SHALL EMPTY INTO THE WET WELL.
5. PLUMB AIR RELEASE DISCHARGE TO FLOOR DRAIN.
6. CONNECT TO EXISTING 12-INCH C-900 PVC FORCE MAIN. CONTRACTOR TO VERIFY ELEVATION.
7. EXTEND SPOOL THROUGH BUILDING WALL SO CONNECTOR IS ON EXTERIOR OF BUILDING. SEAL PIPE PENETRATION.
8. PRESSURE TRANSDUCER AND BACKUP FLOATS TO BE REPLACED IN KIND.
9. REPLACE (OR REPAIR) CONCRETE COVER IN KIND. WORK TO INCLUDE NEW 4-INCH VENT.
10. ACCESS HATCHES WITH SAFETY GRATES.
11. INSTALL NEW CONCRETE FILLET.
12. INSTALL NEW SUBMERSIBLE MIXER AT EXISTING HATCH.
13. INSTALL TWO (2) NEW SUBMERSIBLE PUMPS AS SPECIFIED.

ClarkDietz
500 N. 3RD STREET
SUITE 270
WAUSAU, WI 54403
PHONE : 715.845.1333 www.clarkdietz.com

90% SUBMITTAL
NOT FOR CONSTRUCTION

PROJECT TITLE
CITY OF NEW BERLIN
WESTRIDGE LIFT STATION REHABILITATION
WAUKESHA COUNTY, WI

DESIGNED BY: DLT
DRAWN BY: IWD
CHECKED BY: TSW
DATE CHECKED: 11/23/21

DATE	REVISION
11/29/21	90% SET
09/30/21	50% SET

DRAWING TITLE
LIFT STATION AND WET WELL SECTIONS

PROJECT No.
N0430020

DRAWING No.
M-103

DWG 18 OF 31 DWGS

NOTE: DIMENSIONAL DATA IS NOT TO BE OBTAINED BY SCALING ANY PORTION OF THIS DRAWING.

ELECTRICAL GENERAL NOTES

1. ALL WORK SHALL CONFORM TO THE REQUIREMENTS OF THE CURRENT EDITION OF THE NATIONAL ELECTRICAL CODE, THE MOST CURRENT EDITION OF THE NATIONAL ELECTRICAL SAFETY CODE, AND ALL APPLICABLE LOCAL ORDINANCES.
2. CONTRACTOR SHALL FURNISH ALL MATERIALS FOR A COMPLETE AND WORKABLE SYSTEM.
3. CONTRACTOR SHALL BE RESPONSIBLE FOR OBTAINING ALL REQUIRED PERMITS AND FOR PROVIDING ALL SUPERVISION, LABOR AND TOOLS FOR THE PROJECT.
4. ALL WORK IS TO CONFORM TO A TIME SCHEDULE TO BE ESTABLISHED BY THE OWNER.
5. CONTRACTOR SHALL COORDINATE THE WORK SCHEDULE WITH THE OWNER AND OBTAIN THE OWNER'S APPROVAL BEFORE ANY WORK INVOLVING A SHUTDOWN IS DONE.
6. ALL MATERIALS FURNISHED BY THE CONTRACTOR ARE TO BE NEW AND APPROVED BY THE OWNER AS TO MANUFACTURER AND TYPE.
7. ALL CONDUITS SHALL BE PROVIDED WITH AN INSULATED COPPER EQUIPMENT GROUNDING CONDUCTOR SIZED IN ACCORDANCE WITH THE CURRENT EDITION OF THE NATIONAL ELECTRICAL CODE.
8. ALL LOCATIONS AND DIMENSIONS SHOWN ARE APPROXIMATE. CONTRACTOR SHALL FIELD VERIFY ALL ELECTRICAL EQUIPMENT LOCATIONS AND EQUIPMENT DIMENSIONS. CONTRACTOR SHALL BE RESPONSIBLE FOR PROVIDING EQUIPMENT THAT WILL FIT IN THE SPACE ALLOTTED.
9. THE LOCATION OF UTILITIES AND STRUCTURES, BOTH SURFACE AND SUBSURFACE, ARE SHOWN ON THE PLANS FROM DATA AVAILABLE AT THE TIME OF THE SURVEY AND ARE NOT NECESSARILY COMPLETE OR CORRECT. THE EXACT LOCATION AND PROTECTION OF UTILITIES AND STRUCTURES IS THE RESPONSIBILITY OF THE CONTRACTOR. DURING CONSTRUCTION THE CONTRACTOR SHALL USE DILIGENCE TO PROTECT ALL EXISTING UTILITIES AND STRUCTURES WHETHER SHOWN ON THE PLANS OR NOT. IF DAMAGE IS CAUSED, THE CONTRACTOR SHALL BE RESPONSIBLE FOR REPAIR AND RESTORATION OF SAME IN ACCORDANCE WITH THE DIRECTIONS OF THE ENGINEER AND FOR ANY RESULTING CONTINGENT DAMAGES.
10. BEFORE WORKING WITH OR AROUND EXISTING UTILITIES, THE APPLICABLE UTILITY COMPANY SHALL BE CONTACTED BY THE CONTRACTOR.
11. POWER, INSTRUMENTATION AND CONTROL WIRING SHALL BE INSTALLED IN SEPARATE CONDUITS. SHIELDED CONDUCTORS SHALL NOT BE INSTALLED IN THE SAME CONDUIT AS ANY UNSHIELDED CONDUCTORS.
12. REMOVE ALL UNUSED CONDUIT AND WIRE BACK TO SOURCE ASSOCIATED WITH EQUIPMENT BEING REMOVED OR RELOCATED. CONCEALED CONDUIT BELOW FLOOR OR UNDERGROUND MAY REMAIN IN PLACE.
13. CONDUIT RUNS SHALL BE ROUTED TO AVOID, AND NEVER RUN BELOW, STEAM, WATER OR OTHER PIPE WHICH MAY HAVE AN ADVERSE EFFECT DUE TO HEAT OR LEAKS. WHERE CONDUIT PARALLELS OR CROSSES SUCH PIPES, A MINIMUM SEPARATION OF 12 INCHES SHALL BE MAINTAINED.
14. LIQUID-TIGHT FLEXIBLE CONDUIT (MAXIMUM OF 24") SHALL BE USED IN CONNECTING MOTORS, SENSING ELEMENTS, INSTRUMENTS, SOLENOID VALVES, OR ANY OTHER DEVICE WHICH TRANSMIT VIBRATION OR NOISE, REQUIRE MOVEMENT FOR ADJUSTMENT, OR REQUIRE REMOVAL FOR MAINTENANCE. MINIMUM SIZE OF FLEXIBLE CONDUIT SHALL BE 1/2".
15. JUNCTION BOXES, CABINETS, SWITCHES AND OTHER ELECTRICAL EQUIPMENT SHALL BE SOLIDLY ATTACHED PRIOR TO INSTALLATION OF CONDUIT.
16. CONDUIT, PULL BOXES, CABINETS, ETC. SHALL FORM A CONTINUOUS CONDUCTIVE GROUND SYSTEM. AT TRANSITIONS AND BREAKS, CONDUIT SHALL BE BONDED.
17. CONDUIT SHALL NOT BE FASTENED TO OTHER EQUIPMENT OR SO INSTALLED AS TO PREVENT THE READY REMOVAL OF OTHER EQUIPMENT FOR REPAIRS. INSTALLATION OF CONDUITS MUST NOT INTERFERE WITH ACCESS WAYS OR LADDERS.
18. ONLY PULLBOXES SPECIFICALLY REQUIRED BY THE ENGINEER IN LOCATIONS SHOWN ARE IDENTIFIED. CONTRACTOR SHALL PROVIDE ALL PULLBOXES REQUIRED TO MEET APPLICABLE CODES.
19. WIRING SHALL BE IDENTIFIED BY PERMANENT WIRE MARKERS AT EACH TERMINATION AND SHALL CORRESPOND WITH THE IDENTIFICATION NUMBERS ON THE DRAWINGS.
20. CONDUCTORS SHALL BE CONTINUOUS FROM POINT OF ORIGIN TO THE TERMINATION. NO CABLE SHALL BE SPLICED EXCEPT AS SHOWN ON THE DRAWINGS OR ON EXPLICIT INSTRUCTIONS OF THE OWNER.
21. TERMINALS ON TERMINAL BLOCKS SHALL BE PLAINLY AND PERMANENTLY MARKED TO CORRESPOND WITH THE IDENTIFICATION NUMBERS ON THE DIAGRAMS.
22. CONTRACTOR SHALL FURNISH JUNCTION BOXES, AND PULLBOXES AS REQUIRED. ALL INTERIOR JUNCTION BOXES AND PULLBOXES SHALL BE NEMA 12 ENCLOSURES UNLESS OTHERWISE INDICATED. ALL EXTERIOR JUNCTION BOXES AND PULLBOXES SHALL BE STAINLESS STEEL NEMA 4X ENCLOSURES UNLESS OTHERWISE INDICATED.
23. CONTRACTOR SHALL PROVIDE AND INSTALL ALL CABLES AND WIRE FROM CONTROL/INSTRUMENTATION DEVICES BACK TO ASSOCIATED CONTROL PANELS.
24. CONTRACTOR SHALL PROVIDE 20% SPARE CONTROL WIRES (MINIMUM OF 3 SPARES) FOR EACH CONTROL DEVICE. CAP SPARE WIRES AND LABEL AS SPARE.
25. FABRICATED BOXES 24 x 24 INCHES OR SMALLER SHALL BE MADE FROM 10 GAUGE STEEL SHEET.
26. FABRICATED BOXES LARGER THAN 24 x 24 INCHES SHALL BE MADE FROM 1/8" STEEL SHEET.
27. BOXES INSTALLED IN AN AREA DEFINED TO BE ACIDIC OR CAUSTIC SHALL BE MADE FROM TYPE 316 STAINLESS STEEL UNLESS INDICATED OTHERWISE ON THE DRAWINGS.
28. IN DRY AND/OR CLEAN AREAS CONDUIT ATTACHMENT TO BOXES SHALL BE MADE BY THE USE OF DOUBLE STEEL LOCK NUT (ONE OF WHICH SHALL BE OF THE BONDING TYPE) AND AN INSULATING BUSHING ON THE END OF EACH CONDUIT TERMINATION IN THE BOX.
29. IN WET AND/OR DUSTY AREAS AND EXTERIOR LOCATIONS, CONDUIT ATTACHMENT TO BOXES SHALL BE MADE WITH A WATERTIGHT CONDUIT HUB AS MANUFACTURED BY EFCOR CO. OR OWNER APPROVED EQUAL.
30. CONTRACTOR SHALL LEAVE SLACK IN ALL CABLE IN ALL BOXES.
31. CONTRACTOR SHALL FURNISH AND INSTALL BARRIERS IN BOXES AS REQUIRED OR CALLED FOR ON THE DRAWINGS. BARRIERS SHALL BE MADE FROM A MINIMUM OF 10 GAUGE STEEL SHEET AND HELD IN PLACE WITH CLIP ANGLES.
32. ALL BARRIERS SHALL BE INSTALLED IN BOXES UPON COMPLETION OF THE INSTALLATION OF CABLE AND SHALL BE REMOVABLE TO PERMIT FUTURE CABLE INSTALLATION.
33. ALL CABLES WITHIN BOXES SHALL BEAR A CABLE IDENTIFICATION TAG IN ACCORDANCE WITH THE SPECIFICATIONS.

SUGGESTED SEQUENCE OF CONSTRUCTION

THE FOLLOWING SEQUENCE IS PROVIDED AS ONE POSSIBLE SEQUENCE OF CONSTRUCTION THAT ALLOWS MINIMAL IMPACT ON THE OPERATIONS OF THE EXISTING FACILITY. CONTRACTOR SHALL SUBMIT A CONSTRUCTION SCHEDULE THAT INCLUDES THE ACTUAL CONSTRUCTION SEQUENCE FOR REVIEW BY THE ENGINEER AND THE OWNER FOR APPROVAL. SUBMITTAL SHALL INCLUDE DETAILS ON THE NUMBER OF POWER OUTAGES AND ANTICIPATED DURATION OF POWER OUTAGES. POWER OUTAGES SHALL BE PLANNED TO HAVE MINIMAL EFFECT ON OPERATIONS AND SHALL BE LIMITED TO THE SHORTEST DURATION POSSIBLE.

1. **###**

ELECTRICAL ABBREVIATIONS

A	AMPERES	IN	INCHES
AC	ABOVE COUNTER	KV	KILO-VOLT
AFF	ABOVE FINISHED FLOOR	KVA	KILO-VOLT AMPERES
ALUM	ALUMINUM	KW	KILOWATTS
ASPH	ASPHALT	LBS	POUNDS
CSDS	COMBINATION STARTER/DISC. SW.	MC	MECHANICAL CONTRACTOR
CKT	CIRCUIT	MCC	MOTOR CONTROL CENTER
CLG	CEILING	MLO	MAIN LUG ONLY
CONC	CONCRETE	MMS	MANUAL MOTOR STARTER
CONT	CONTINUED	MSWB	MAIN SWITCHBOARD
CSDS	COMBINATION STARTER/DISC. SW.	OC	OVERCURRENT
DDC	DIRECT DIGITAL CONTROL	P	POLE
DN	DOWN	PRI	PRIMARY
E	ELECTRIC	RGS	RIGID GALVANIZED STEEL
EC	ELECTRICAL CONTRACTOR	RPM	REVOLUTIONS PER MINUTE
EM	EMERGENCY	SE	SERVICE ENTRANCE
FDR	FEEDER	SEC	SECONDARY
FLA	FULL LOAD AMPERES	SS	STAINLESS STEEL
FLUOR	FLUORESCENT	T	TELEPHONE
FVNR	FULL VOLTAGE NON-REVERSING	UL	UNDERWRITER'S LABORATORY
FV2S	FULL VOLTAGE 2-SPEED	UPS	UNINTERRUPTIBLE POWER SUPPLY
G,GND	GROUND	V	VOLTS
GC	GENERAL CONTRACTOR	VA	VOLT AMPERES
GFI	GROUND FAULT INTERRUPTER	VFD	VARIABLE FREQUENCY DRIVE
HP	HORSEPOWER	W	WATTS
		WP	WEATHER PROOF

ClarkDietz
500 N. 3RD STREET
SUITE 200
WAUSAU, WI 54403
PHONE : 715.845.1333 www.clarkdietz.com

90% SUBMITTAL
NOT FOR CONSTRUCTION

PROJECT TITLE
CITY OF NEW BERLIN
WESTRIDGE LIFT STATION REHABILITATION
WAUKESHA COUNTY, WI

DESIGNED BY: DLT
DRAWN BY: IWD
CHECKED BY: TSW
DATE CHECKED: 11/23/21

DATE	REVISION
11/29/21	90% SET
09/30/21	50% SET

DRAWING TITLE
ELECTRICAL GENERAL NOTES, SYMBOLS, AND ABBREVIATIONS

PROJECT No.
N0430020

DRAWING No.
E-001

DWG 19 OF 31 DWGS

NOTE: DIMENSIONAL DATA IS NOT TO BE OBTAINED BY SCALING ANY PORTION OF THIS DRAWING.

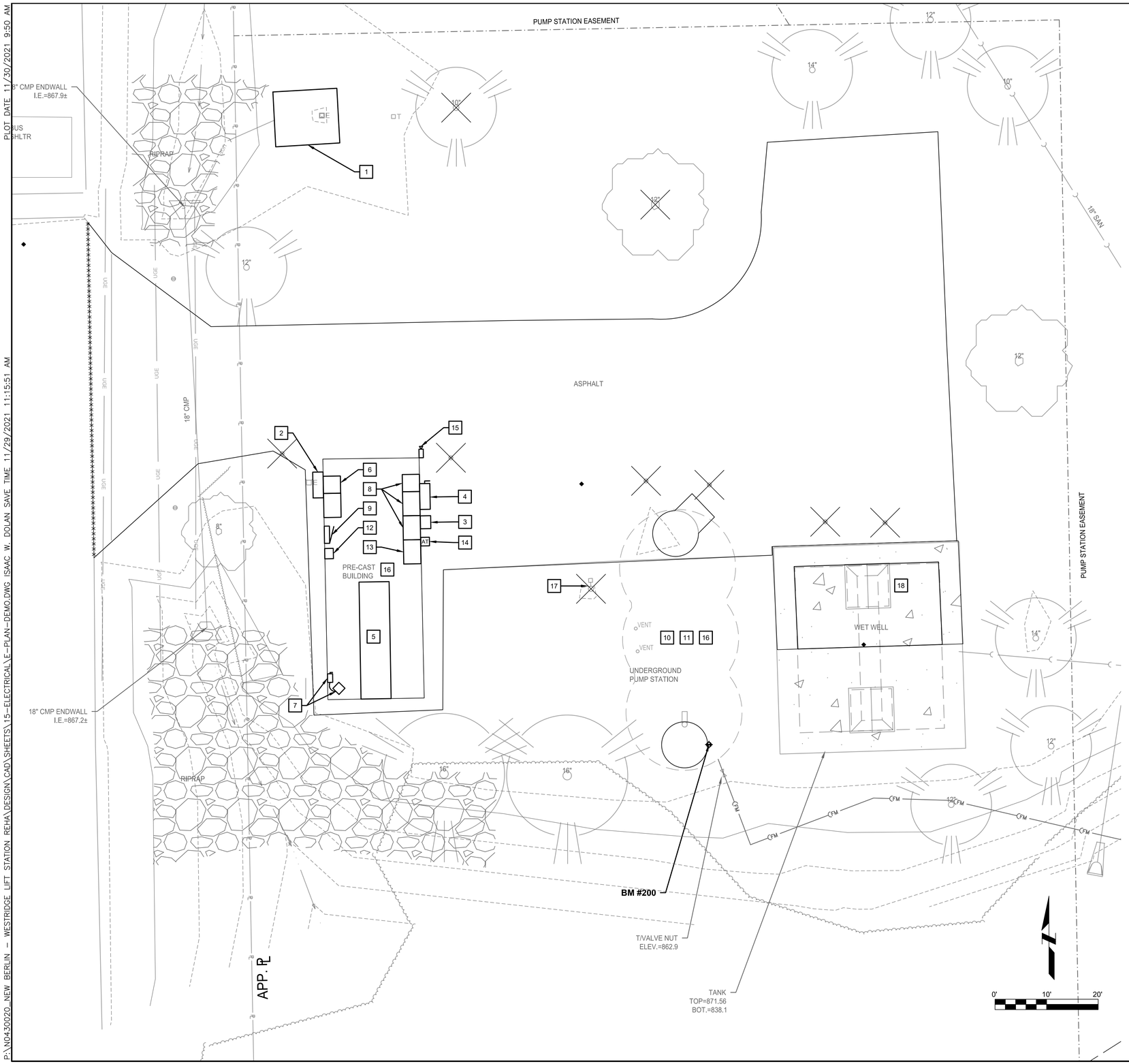

GENERAL NOTES

1. CONTRACTOR SHALL BE RESPONSIBLE FOR DISPOSAL OF ALL REMOVED EQUIPMENT, CONDUCTORS AND ANY ASSOCIATED DISPOSAL COSTS UNLESS OTHERWISE NOTED.

DEMO NOTES (THIS SHEET)

1. COORDINATE REMOVAL OF EXISTING ELECTRICAL SERVICE WITH WE ENERGIES. CONTRACTOR SHALL REMOVE EXISTING TRANSFORMER PAD, SECONDARY CONDUITS AND CONDUCTORS.
2. REMOVE EXISTING CT CABINET AND METER.
3. REMOVE EXISTING PORTABLE GENERATOR CONNECTION BOX.
4. REMOVE EXISTING MANUAL TRANSFER SWITCH/TWO POSITION DISCONNECT SWITCH.
5. CAREFULLY DISCONNECT EXISTING DIESEL GENERATOR AND GENERATOR ACCESSORIES. GENERATOR AND ACCESSORIES SHALL BE SALVAGED TO THE OWNER. CONTRACTOR SHALL PROVIDE CRANE AND TRANSPORTATION SERVICES AS REQUIRED FOR REMOVAL, LOADING AND UNLOADING OF CRANE AT OWNER'S REMOTE SITE. SPECIFIC LOCATION OF REMOTE SITE WITHIN THE CITY OF NEW BERLIN TO BE DETERMINED BY OWNER.
6. REMOVE EXISTING MOTOR CONTROL CENTER MCC-1.
7. REMOVE EXISTING UNIT HEATER AND ASSOCIATED DISCONNECT SWITCH.
8. REMOVE EXISTING MOTOR CONTROL CENTER MCC-2.
9. REMOVE EXISTING PANEL LP.
10. REMOVE EXISTING PUMP CHAMBER PANEL LOCATED IN UNDERGROUND PUMP STATION.
11. DISCONNECT PUMP MOTORS, QUANTITY OF 3, LOCATED IN UNDERGROUND PUMP STATION. SEE DEMOLITION ONE-LINE DIAGRAM FOR ADDITIONAL INFORMATION.
12. CAREFULLY DISCONNECT AND REMOVE EXISTING TELEMETRY PANEL. SALVAGE PANEL TO OWNER.
13. REMOVE EXISTING PUMP CONTROL PANEL.
14. CAREFULLY DISCONNECT AND REMOVE SCADA ANTENNA. SALVAGE ANTENNA TO OWNER.
15. CAREFULLY DISCONNECT AND REMOVE EXISTING SURVEILLANCE CAMERA. SALVAGE CAMERA, MOUNT AND BACK BOX TO OWNER.
16. CONTRACTOR SHALL BE RESPONSIBLE FOR DISPOSAL OF ALL REMAINING ELECTRICAL EQUIPMENT INCLUDING:
    - 16.1. FLUORESCENT LIGHT FIXTURES, LAMPS AND BALLASTS.
    - 16.2. HID LIGHT FIXTURES, LAMPS AND BALLASTS.
    - 16.3. CONDUIT AND WIRING.
    - 16.4. OTHER ELECTRICAL EQUIPMENT NOT SPECIFICALLY IDENTIFIED FOR OWNER SALVAGE.
17. REMOVE EXISTING LIGHT FIXTURE, POLE AND CONCRETE BASE.
18. REMOVE ALL CONTROL EQUIPMENT AND WIRING AT WET WELL.

ClarkDietz
500 N. 3RD STREET
SUITE 200
WAUSAU WI 54403
PHONE : 715.845.1333 www.clarkdietz.com

90% SUBMITTAL
NOT FOR CONSTRUCTION

PROJECT TITLE
CITY OF NEW BERLIN
WESTRIDGE LIFT STATION REHABILITATION
WAUKESHA COUNTY, WI

DESIGNED BY:	DLT
DRAWN BY:	IWD
CHECKED BY:	TSW
DATE CHECKED:	11/23/21

DATE	REVISION
11/29/21	90% SET
09/30/21	50% SET

DRAWING TITLE
ELECTRICAL SITE DEMOLITION PLAN

PROJECT No.
N0430020

DRAWING No.
E-101

DWG 20 OF 31 DWGS

P:\N0430020_NEW BERLIN - WESTRIDGE LIFT STATION REHA\DESIGN\CAD\SHEETS\15-ELECTRICAL\E-PLAN-DEMO.DWG ISAAC W. DOLAN SAVE TIME 11/29/2021 11:15:51 AM PLOT DATE 11/30/2021 9:50 AM

NOTE: DIMENSIONAL DATA IS NOT TO BE OBTAINED BY SCALING ANY PORTION OF THIS DRAWING.

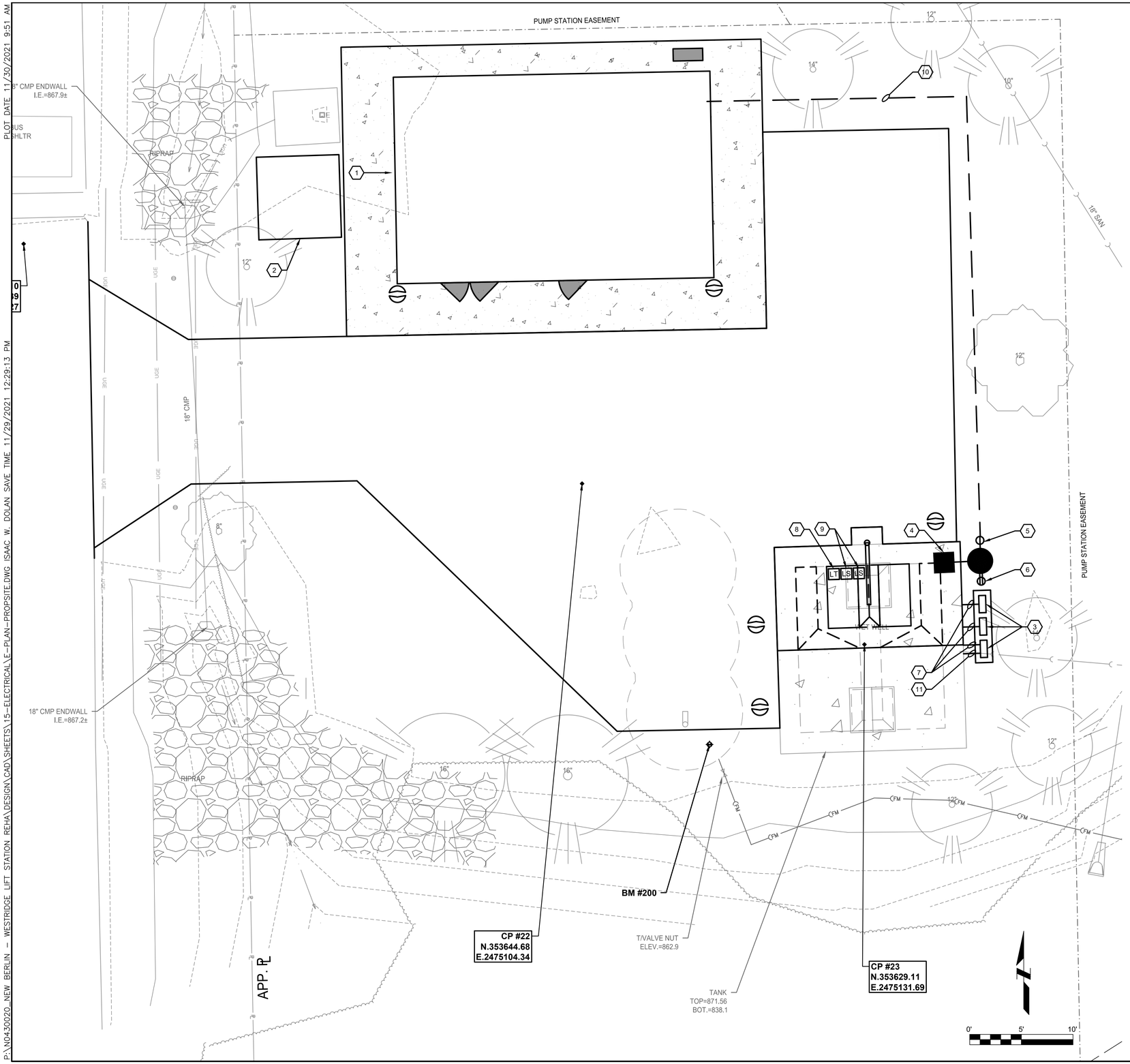

GENERAL NOTES

1. ALL WIRING, CONDUIT AND ELECTRICAL EQUIPMENT LOCATED IN THE WET WELL SHALL BE RATED FOR USE IN CLASS 1, DIVISION 1, GROUP D LOCATIONS PER THE NEC.
2. ALL CONDUITS BETWEEN THE WET WELL AND THE AIR GAP/ENCLOSURES SHALL BE PVC COATED RIGID METALLIC CONDUIT.
3. ALL OTHER CONDUITS SHALL BE PROVIDED AS IDENTIFIED IN SPECIFICATION 26 05 33.

KEYNOTES (THIS SHEET)

1. SEE CONTROL BUILDING PLAN FOR WORK INSIDE THE CONTROL BUILDING.
2. NEW WE ENERGIES PAD MOUNT TRANSFORMER. SEE ONE-LINE DIAGRAM.
3. PROVIDE AIR GAP/ENCLOSURES AS FOLLOWS. PROVIDE CONCRETE PAD FOR ANCHORING OF ENCLOSURE LEG KIT. SEE ONE-LINE DIAGRAM, INTERCONNECT DIAGRAM AND DETAIL:
   - 3.1. PUMP 1 AIR GAP/ENCLOSURE.
   - 3.2. PUMP 2 AIR GAP/ENCLOSURE.
   - 3.3. WET WELL CONTROLS AIR GAP/ENCLOSURE.
4. PROVIDE TYPE P LIGHT FIXTURE, POLE AND BASE. SEE FIXTURE SCHEDULE AND POLE BASE DETAIL.
5. PROVIDE PORTABLE PUMP RECEPTACLE. SURFACE MOUNT RECEPTACLE ON CONCRETE POLE BASE 24" ABOVE GRADE TO BOTTOM OF THE BOX.
6. PROVIDE GFCI PROTECTED DUPLEX CONVENIENCE RECEPTACLE WITH METALLIC IN USE COVER. SURFACE MOUNT RECEPTACLE ON CONCRETE POLE BASE 24" ABOVE GRADE TO BOTTOM OF BOX.
7. PROVIDE UNDERGROUND CONDUITS FROM AIR GAP/ENCLOSURES TO WET WELL. SEE ONE-LINE DIAGRAM AND INTERCONNECT DIAGRAM.
8. PROVIDE LEVEL TRANSDUCER. INSTALL MANUFACTURER PROVIDED CABLING IN CONDUIT DESCRIBED IN KEYNOTE 7. MAKE FINAL CONNECTIONS. PROVIDE STILLING WELL FOR LEVEL TRANSDUCER. STILLING WELL SHALL COMPRISE OF APPROPRIATELY SIZED PVC PIPING WITH DRILLED DRAIN HOLES BELOW THE LOW LEVEL WATER MARK. STILL WELL SHALL BE SUPPORTED TO THE WET WELL STRUCTURE WITH STAINLESS STEEL PIPE CLAMPS, SUPPORT CHANNEL AND HARDWARE AS REQUIRED.
9. INSTALL FLOAT SWITCHES AND SUPPORTING HARDWARE. INSTALL MANUFACTURER CABLING IN CONDUIT DESCRIBED IN KEYNOTE 7.
10. SINGLE LINE REPRESENTING MULTIPLE DIRECT BURIED UNDERGROUND CONDUITS. SEE DIRECT BURIED CONDUIT DETAIL. PROVIDE THE FOLLOWING:
    - 10.1. CONDUIT AND CONDUCTORS FROM VFD-1 TO PUMP 1 AIR GAP/ENCLOSURE. SEE ONE-LINE DIAGRAM.
    - 10.2. CONDUIT AND CONDUCTORS FROM VFD-2 TO PUMP 2 AIR GAP/ENCLOSURE. SEE ONE-LINE DIAGRAM.
    - 10.3. WET WELL CONTROLS CONDUITS FROM LIFT STATION CONTROL PANEL TO WET WELL CONTROLS AIR GAP/ENCLOSURE. SEE INTERCONNECT DIAGRAM.
    - 10.4. AIR MIXER AIR LINE CONDUIT FROM CONTROL BUILDING TO WET WELL CONTROLS AIR GAP/ENCLOSURE. SEE LIGHTING, POWER AND SYSTEMS PLAN FOR ADDITIONAL INFORMATION.
    - 10.5. 1" CONDUIT WITH 2 #10 PHASE CONDUCTORS AND 1 #10 EQUIPMENT GROUNDING CONDUCTOR FROM PANEL LP-1 TO TYPE P POLE FIXTURE.
    - 10.6. CONDUIT AND CONDUCTORS FROM MCC-2 TO PORTABLE PUMP RECEPTACLE. SEE ONE-LINE DIAGRAM.
    - 10.7. 1" CONDUIT WITH 2 #8 PHASE CONDUCTORS AND 1 #8 EQUIPMENT GROUNDING CONDUCTOR FROM PANEL LP-1 TO CONVENIENCE RECEPTACLE.
11. PROVIDE 1-1/2" CONDUIT FROM WET WELL CONTROLS AIR GAP/ENCLOSURE TO WET WELL FOR AIR MIXER AIR LINE INSTALLATION. SEE LIGHTING, POWER AND SYSTEMS PLAN FOR ADDITIONAL INFORMATION.

ClarkDietz
500 N. 3RD STREET
SUITE 200
WAUSAU, WI 54403
PHONE : 715.845.1333 www.clarkdietz.com

90% SUBMITTAL
NOT FOR CONSTRUCTION

PROJECT TITLE
CITY OF NEW BERLIN
WESTRIDGE LIFT STATION REHABILITATION
WAUKESHA COUNTY, WI

DESIGNED BY:	DLT
DRAWN BY:	IWD
CHECKED BY:	TSW
DATE CHECKED:	11/23/21

DATE	REVISION
11/29/21	90% SET
09/30/21	50% SET

DRAWING TITLE
ELECTRICAL SITE PLAN

PROJECT No.
N0430020

DRAWING No.
E-102

DWG 21 OF 31 DWGS

P:\N0430020_NEW BERLIN - WESTRIDGE LIFT STATION REHA\DESIGN\CAD\SHEETS\15-ELECTRICAL\E-PLAN-PROPSITE.DWG ISAAC W. DOLAN SAVE TIME 11/29/2021 12:29:13 PM PLOT DATE 11/30/2021 9:51 AM

NOTE: DIMENSIONAL DATA IS NOT TO BE OBTAINED BY SCALING ANY PORTION OF THIS DRAWING.

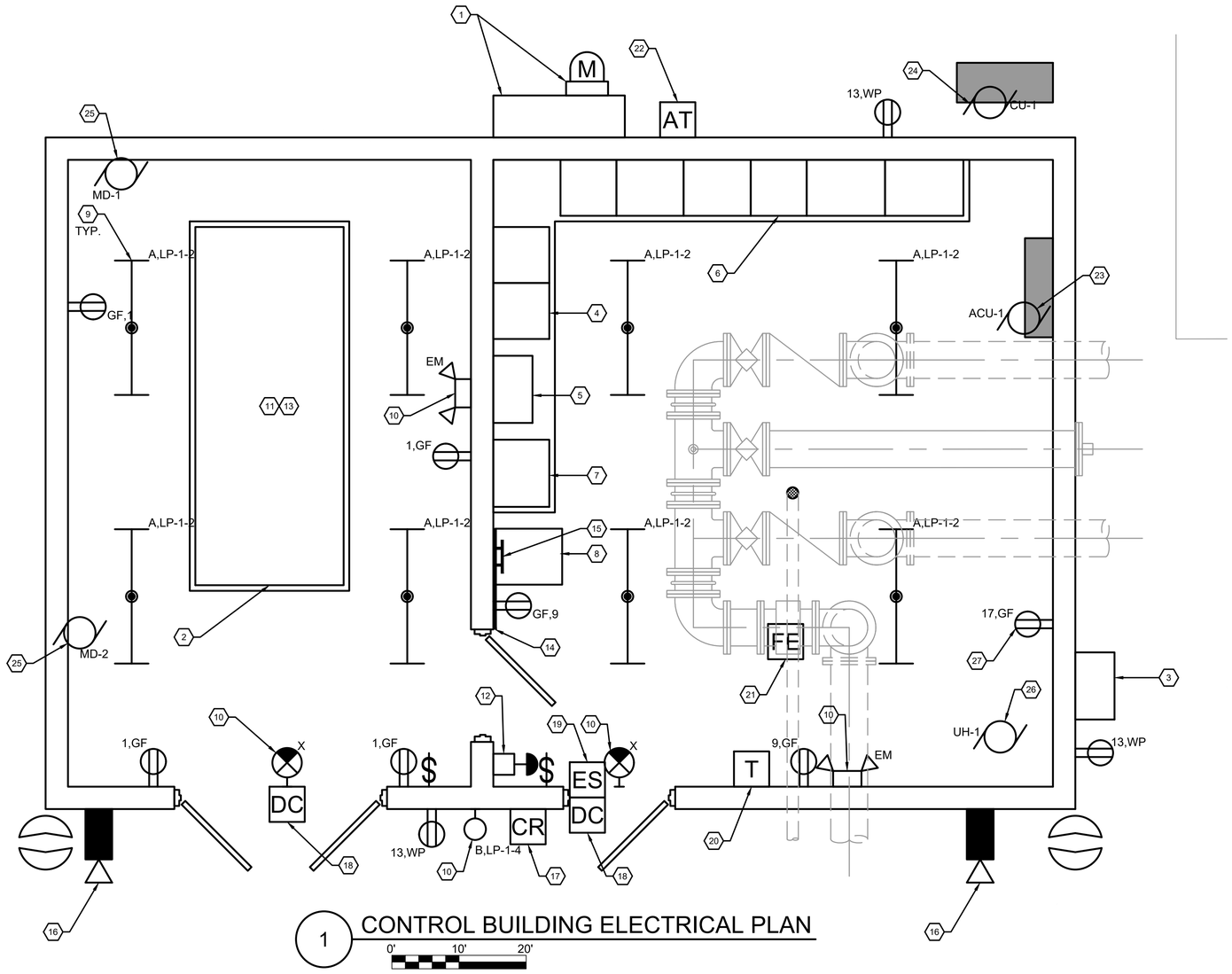

1 CONTROL BUILDING ELECTRICAL PLAN

GENERAL NOTES

1. ALL RECEPTACLES AND SWITCHES SHALL BE MOUNTED 48" ABOVE FINISHED FLOOR TO THE TOP OF THE BOX.
2. ALL BOXES AND CONDUIT SHALL BE ALLOWED TO BE SURFACE MOUNTED.
3. ALL EXIT AND EMERGENCY LIGHTING SHALL BE CONNECTED TO AN UNSWITCHED LEG OF THE LIGHTING CIRCUIT IN THAT AREA.

KEYNOTES (THIS SHEET)

1. PROVIDE TRANSOCKET AND METER BASE. SEE ONE-LINE DIAGRAM.
2. PROVIDE GENERATOR. SEE ONE-LINE DIAGRAM.
3. PROVIDE MANUAL TRANSFER SWITCH/PORTABLE GENERATOR CONNECTION MTS-1. SEE ONE-LINE DIAGRAM.
4. PROVIDE MOTOR CONTROL CENTER MCC-1. SEE ONE-LINE DIAGRAM.
5. PROVIDE AUTOMATIC TRANSFER SWITCH ATS-1. SEE ONE-LINE DIAGRAM. PROVIDE 3/4" CONDUIT WITH 2 #14, 1 #14G FROM ATS-1 TO THE GENERATOR CONTROL PANEL FOR GENERATOR START SIGNAL.
6. PROVIDE MOTOR CONTROL CENTER MCC-2. SEE ONE-LINE DIAGRAM.
7. PROVIDE LIFT STATION CONTROL PANEL LSCP-1. MAKE FINAL CONNECTIONS. SEE EQUIPMENT CONNECTION SCHEDULE AND INTERCONNECT DIAGRAM.
8. PROVIDE SECURITY PANEL SEC-1. MAKE FINAL CONNECTIONS. SEE EQUIPMENT CONNECTION SCHEDULE AND INTERCONNECT DIAGRAM.
9. SURFACE MOUNT LIGHT FIXTURE DIRECT TO CEILING.
10. WALL MOUNT LIGHT FIXTURE AT 9' ABOVE FINISHED FLOOR TO BOTTOM OF FIXTURE.
11. PROVIDE CONNECTIONS TO THE FOLLOWING GENERATOR ACCESSORIES. SEE EQUIPMENT CONNECTION SCHEDULE.
    - 11.1. BATTERY CHARGER BCH-1.
    - 11.2. ENGINE BLOCK HEATER EBH-1.
12. PROVIDE GENERATOR REMOTE EMERGENCY STOP BUTTON. PROVIDE 3/4" CONDUIT WITH 2 #14, 1 #14G FROM EMERGENCY STOP TO GENERATOR CONTROL PANEL. PROVIDE MONITORING CONDUIT AND CONDUCTORS. SEE INTERCONNECT DIAGRAM.
13. PROVIDE GENERATOR CONTROL PANEL MONITORING CONNECTIONS. SEE INTERCONNECT DIAGRAM.
14. PROVIDE TELECOMMUNICATIONS SERVICE ENTRANCE AS FOLLOWS:
    - 14.1. PROVIDE 3/4" x 36" x 96" PAINTED FIRE RATED PLYWOOD BACKBOARD MOUNTED TO BLOCK WALL.
    - 14.2. PROVIDE (2) 2" CONDUITS FROM BACKBOARD BELOW SLAB TO THE NORTH SIDE OF THE BUILDING FOR TELECOMMUNICATIONS SERVICE ENTRANCE.
15. PROVIDE MAIN GROUND BAR MGB. SEE GROUNDING DIAGRAM.
16. PROVIDE CAMERA. COORDINATE SPECIFIC HEIGHT AND LOCATION WITH CAMERA VENDOR. MAKE FINAL CONNECTIONS. SEE INTERCONNECT DIAGRAM.
17. PROVIDE CARD READER. MOUNT AT 48" ABOVE GRADE TO TOP OF THE BOX. MAKE FINAL CONNECTIONS. SEE INTERCONNECT DIAGRAM.
18. PROVIDE DOOR CONTACT. MAKE FINAL CONNECTIONS. SEE INTERCONNECT DIAGRAM.
19. PROVIDE ELECTRIC STRIKE. MAKE FINAL CONNECTIONS. SEE INTERCONNECT DIAGRAM.
20. PROVIDE ROOM TEMPERATURE SENSOR T-1. MAKE FINAL CONNECTIONS. SEE INTERCONNECT DIAGRAM.
21. PROVIDE FLOW METER FE-1. MAKE FINAL CONNECTIONS. SEE EQUIPMENT CONNECTION SCHEDULE AND INTERCONNECT DIAGRAM.
22. PROVIDE RADIO ANTENNA AT-2. MAKE FINAL CONNECTIONS. SEE INTERCONNECT DIAGRAM AND MOUNTING DETAIL.
23. ACU-1. MAKE FINAL CONNECTIONS. SEE EQUIPMENT CONNECTION SCHEDULE.
24. CU-1. MAKE FINAL CONNECTIONS. SEE EQUIPMENT CONNECTION SCHEDULE.
25. MOTORIZED DAMPERS MD-1 AND MD-2. MAKE FINAL CONNECTIONS. SEE EQUIPMENT CONNECTION SCHEDULE AND GENERATOR ROOM LOUVER CONTROL DIAGRAM.
26. UH-1. MAKE FINAL CONNECTIONS. SEE EQUIPMENT CONNECTION SCHEDULE.
27. PROVIDE RECEPTACLE FOR AIR MIXER PUMP. PROVIDE 1-1/2" CONDUIT FROM THE BUILDING TO THE WET WELL CONTROLS AIR GAP/ENCLOSURE FOR THE AIR MIXER AIR LINE.PROVIDE PULL STRING FROM WET WELL TO BUILDING FOR INSTALLATION OF AIR MIXER AIR LINE.

ClarkDietz
500 N. 3RD STREET
SUITE 200
WAUSAU WI 54403
PHONE : 715.845.1333 www.clarkdietz.com

90% SUBMITTAL
NOT FOR CONSTRUCTION

PROJECT TITLE
CITY OF NEW BERLIN
WESTRIDGE LIFT STATION REHABILITATION
WAUKESHA COUNTY, WI

DESIGNED BY:	DLT
DRAWN BY:	IWD
CHECKED BY:	TSW
DATE CHECKED:	11/23/21

DATE	REVISION
11/29/21	90% SET
09/30/21	50% SET

DRAWING TITLE
LIFT STATION LIGHTING, POWER, AND SYSTEMS PLAN

PROJECT No.
N0430020

DRAWING No.
E-103

DWG 22 OF 31 DWGS

PLOT DATE 11/30/2021 9:51 AM
P:\N0430020_NEW BERLIN - WESTRIDGE LIFT STATION REHA\DESIGN\CAD\SHEETS\15-ELECTRICAL\E-PLAN.DWG ISAAC W. DOLAN SAVE TIME 11/29/2021 12:59:58 PM
NOTE: DIMENSIONAL DATA IS NOT TO BE OBTAINED BY SCALING ANY PORTION OF THIS DRAWING.

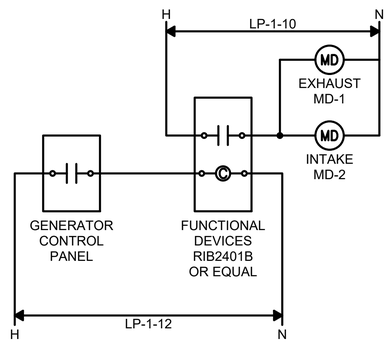

GENERATOR ROOM LOUVER CONTROL DETAIL

NOT TO SCALE

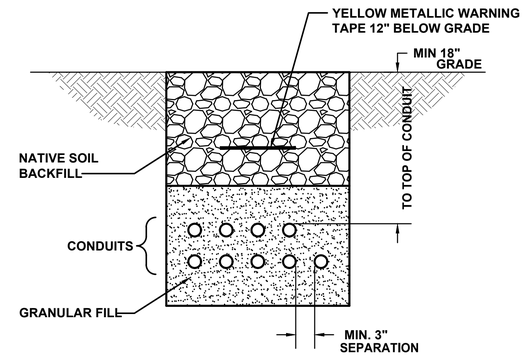

NOTES:

1. BACKFILL MATERIALS SHALL BE AS FOLLOWS:
   - 1.1. MINIMUM OF 3" SAND ON ALL SIDES OF CONDUITS.
   - 1.2. USE EXCAVATED AND RE-USED SUBSOIL (FREE OF CLUMPS LARGER THAN 3" AND DEBRIS) ON TOP OF SAND TO 6" BELOW GRADE.
   - 1.3. USE EXCAVATED AND RE-USED TOP SOIL (FREE OF ROOTS, ROCKS LARGER THAN 1/2", SUBSOIL, DEBRIS, LARGE WEEDS AND FOREIGN MATTER; SINGLE SCREENED) FROM 6" BELOW GRADE TO GRADE.
2. COMPACT UNIFORMLY TO 95 PERCENT OF MAXIMUM DENSITY.
3. PROVIDE THERMOPLASTIC SPACER SYSTEM LOCATED EVERY 5' FOR SUPPORT AND SPACING OF CONDUITS. SPACER SYSTEM SHALL BE CARLON SNAP-N-STAC COMBO SPACERS, OR EQUAL.

DIRECT BURIED CONDUIT DETAIL

NOT TO SCALE

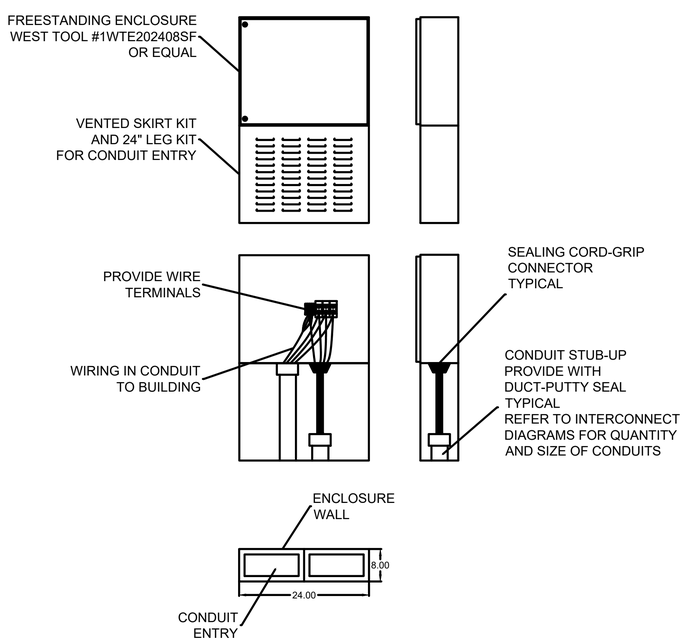

AIR GAP/ENCLOSURE DETAIL

NOT TO SCALE

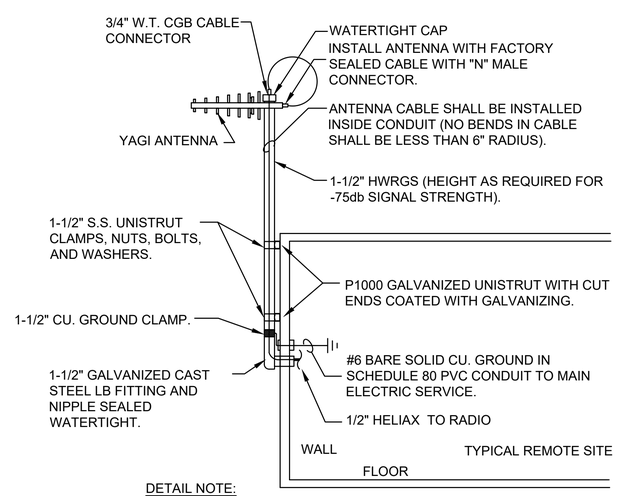

DETAIL NOTE:

ANTENNA MOUNTING STATION AT EACH SITE TO BE SELECTED BY SPREAD SPECTRUM RADIO SUPPLIER FOR OPTIMUM SIGNAL TRANSMISSION AND RECEIVING STRENGTH. A TOWER SHALL BE PROVIDED AND INSTALLED BY THIS CONTRACTOR WHEN THE ANTENNA IS HIGHER THAN 20 FEET FOR OPTIMUM SIGNAL STRENGTH (-75db OR LESS).

ANTENNA MOUNTING DETAIL

NOT TO SCALE

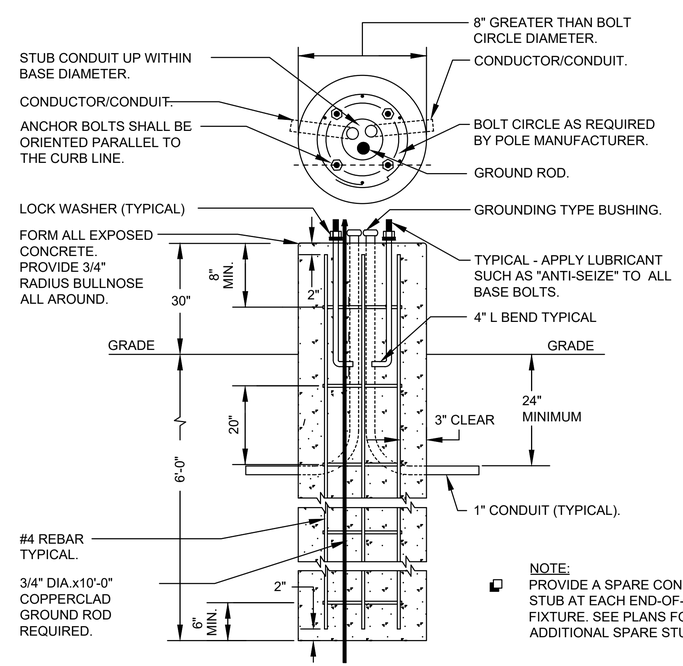

NOTE:
PROVIDE A SPARE CONDUIT STUB AT EACH END-OF-LINE FIXTURE. SEE PLANS FOR ADDITIONAL SPARE STUBS.

POLE BASE DETAIL

NOT TO SCALE

ClarkDietz
500 N. 3RD STREET
SUITE 200
WAUSAU, WI 54403
PHONE : 715.845.1333 www.clarkdietz.com

90% SUBMITTAL
NOT FOR CONSTRUCTION

PROJECT TITLE
CITY OF NEW BERLIN
WESTRIDGE LIFT STATION
REHABILITATION
WAUKESHA COUNTY, WI

DESIGNED BY:	DLT
DRAWN BY:	IWD
CHECKED BY:	TSW
DATE CHECKED:	11/23/21

DATE	REVISION
11/29/21	90% SET
09/30/21	50% SET

DRAWING TITLE
LIFT STATION ELECTRICAL
DETAILS

PROJECT No.
N0430020

DRAWING No.
E-501

DWG 23 OF 31 DWGS

NOTE: DIMENSIONAL DATA IS NOT TO BE OBTAINED BY SCALING ANY PORTION OF THIS DRAWING.

P:\N0430020_NEW BERLIN - WESTRIDGE LIFT STATION REHA\DESIGN\CAD\SHEETS\15-ELECTRICAL\E-DETAILS.DWG ISAAC W. DOLAN SAVE TIME 11/29/2021 11:17:27 AM PLOT DATE 11/30/2021 9:52 AM

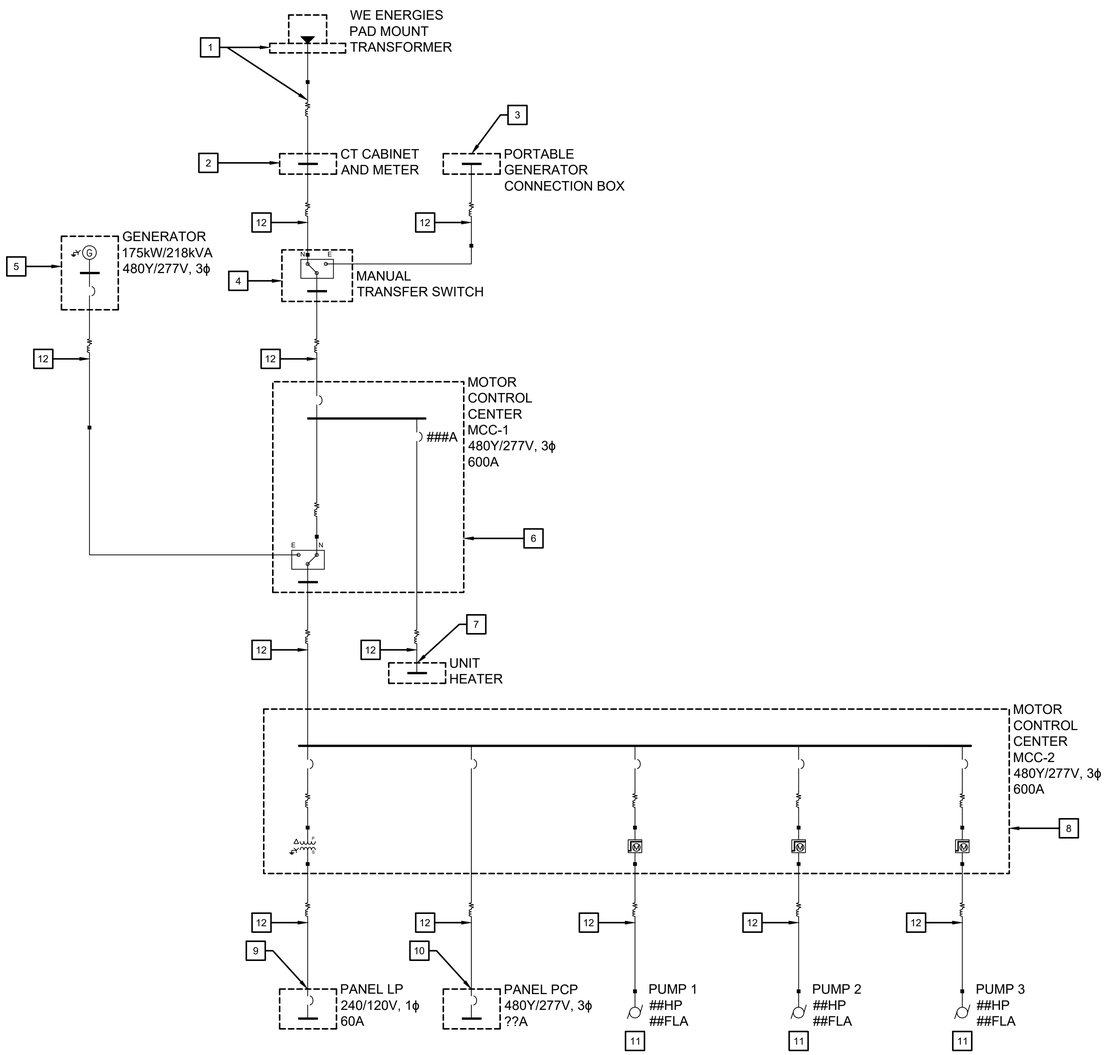

1 DEMOLITION ONE-LINE DIAGRAM

NOT TO SCALE

GENERAL NOTES

1. CONTRACTOR SHALL BE RESPONSIBLE FOR DISPOSAL OF ALL REMOVED EQUIPMENT, CONDUCTORS AND ANY ASSOCIATED DISPOSAL COSTS UNLESS OTHERWISE NOTED.

DEMO NOTES (THIS SHEET)

1. COORDINATE REMOVAL OF EXISTING ELECTRICAL SERVICE WITH WE ENERGIES. CONTRACTOR SHALL REMOVE EXISTING TRANSFORMER PAD, SECONDARY CONDUITS AND CONDUCTORS.
2. REMOVE EXISTING CT CABINET AND METER.
3. REMOVE EXISTING PORTABLE GENERATOR CONNECTION BOX.
4. REMOVE EXISTING MANUAL TRANSFER SWITCH/TWO POSITION DISCONNECT SWITCH.
5. CAREFULLY DISCONNECT EXISTING DIESEL GENERATOR AND GENERATOR ACCESSORIES. GENERATOR AND ACCESSORIES SHALL BE SALVAGED TO THE OWNER. CONTRACTOR SHALL PROVIDE CRANE AND TRANSPORTATION SERVICES AS REQUIRED FOR REMOVAL, LOADING AND UNLOADING OF CRANE AT OWNER'S REMOTE SITE. SPECIFIC LOCATION OF REMOTE SITE WITHIN THE CITY OF NEW BERLIN TO BE DETERMINED BY OWNER.
6. REMOVE EXISTING MOTOR CONTROL CENTER MCC-1.
7. REMOVE EXISTING UNIT HEATER.
8. REMOVE EXISTING MOTOR CONTROL CENTER MCC-2.
9. REMOVE EXISTING PANEL LP.
10. REMOVE EXISTING PUMP CHAMBER PANEL, LOCATED IN UNDERGROUND PUMP STATION.
11. DISCONNECT PUMP MOTOR LOCATED IN UNDERGROUND PUMP STATION.
12. REMOVE EXISTING CONDUIT AND CONDUCTORS.

ClarkDietz
500 N. 3RD STREET
SUITE 200
WAUSAU WI 54403
PHONE : 715.845.1333 www.clarkdietz.com

90% SUBMITTAL
NOT FOR CONSTRUCTION

PROJECT TITLE
CITY OF NEW BERLIN
WESTRIDGE LIFT STATION
REHABILITATION
WAUKESHA COUNTY, WI

DESIGNED BY: DLT
DRAWN BY: IWD
CHECKED BY: TSW
DATE CHECKED: 11/23/21

DATE	REVISION
11/29/21	90% SET
09/30/21	50% SET

DRAWING TITLE
DEMOLITION ONE-LINE DIAGRAM

PROJECT No.
N0430020

DRAWING No.
E-601

DWG 24 OF 31 DWGS

P:\N0430020_NEW BERLIN - WESTRIDGE LIFT STATION REHA\DESIGN\CAD\SHEETS\15-ELECTRICAL\DEMOLITION ONE-LINE DIAGRAM.DWG ISAAC W. DOLAN SAVE TIME 11/29/2021 11:16:49 AM PLOT DATE 11/30/2021 9:52 AM

NOTE: DIMENSIONAL DATA IS NOT TO BE OBTAINED BY SCALING ANY PORTION OF THIS DRAWING.

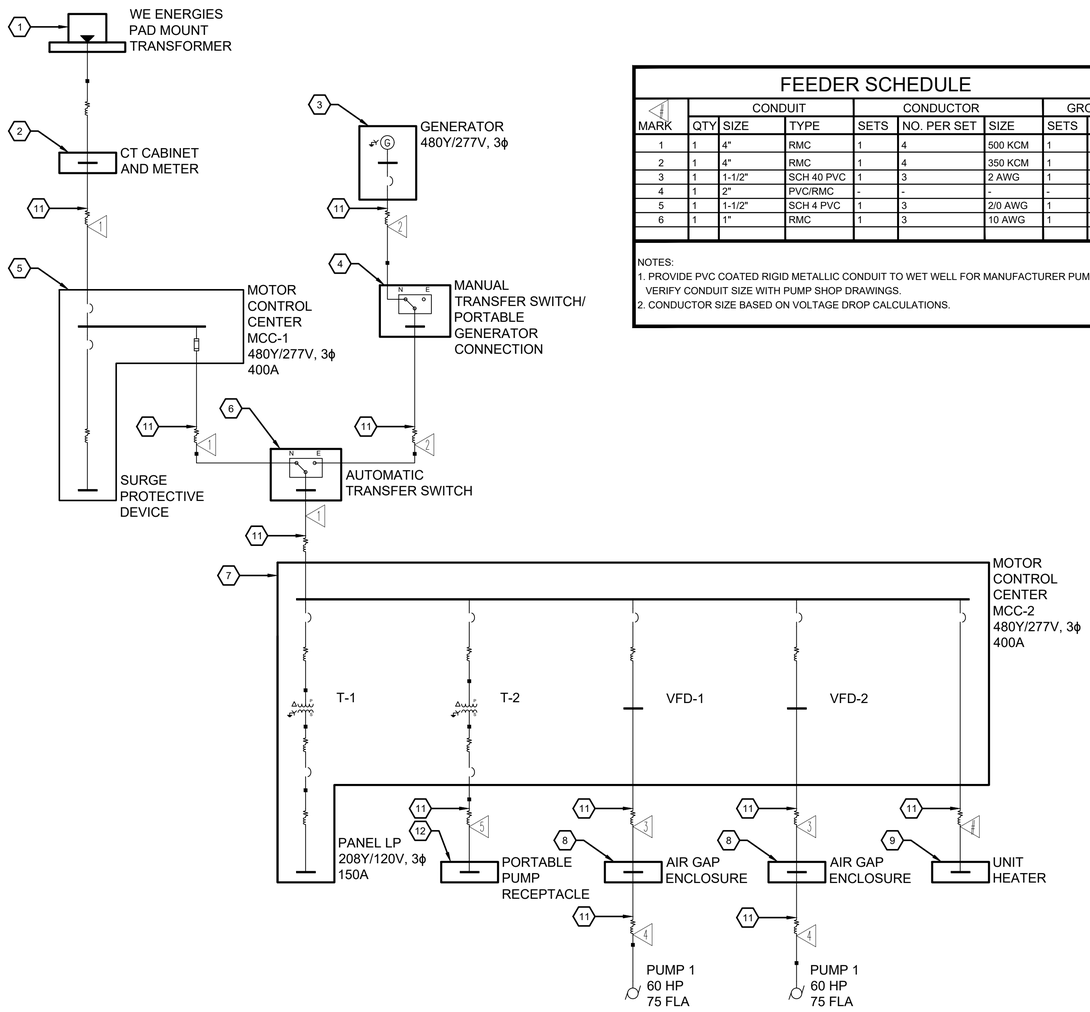

FEEDER SCHEDULE

MARK	CONDUIT QTY	CONDUIT SIZE	CONDUIT TYPE	CONDUCTOR SETS	CONDUCTOR NO. PER SET	CONDUCTOR SIZE	GROUND SETS	GROUND SIZE	NOTES
1	1	4"	RMC	1	4	500 KCM	1	3 AWG	
2	1	4"	RMC	1	4	350 KCM	1	4 AWG	
3	1	1-1/2"	SCH 40 PVC	1	3	2 AWG	1	6 AWG	
4	1	2"	PVC/RMC	-	-	-	-	-	1
5	1	1-1/2"	SCH 4 PVC	1	3	2/0 AWG	1	2 AWG	2
6	1	1"	RMC	1	3	10 AWG	1	10 AWG	

NOTES:
1. PROVIDE PVC COATED RIGID METALLIC CONDUIT TO WET WELL FOR MANUFACTURER PUMP CABLE. VERIFY CONDUIT SIZE WITH PUMP SHOP DRAWINGS.
2. CONDUCTOR SIZE BASED ON VOLTAGE DROP CALCULATIONS.

1 ONE-LINE DIAGRAM

NOT TO SCALE

GENERAL NOTES

1. SEE PLANS FOR EQUIPMENT LOCATIONS.

KEYNOTES (THIS SHEET)

1. COORDINATE INSTALLATION OF NEW PAD MOUNT TRANSFORMER WITH WE ENERGIES. TRANSFORMER, CONCRETE PAD, PRIMARY CONDUITS/CONDUCTORS AND SECONDARY CONDUITS/CONDUCTORS PROVIDED BY WE ENERGIES. SERVICE APPLICATION SHALL BE COMPLETED BY THE ENGINEER. ALL SERVICE FEES SHALL BE PAID BY THE OWNER.
2. PROVIDE WE ENERGIES APPROVED 480/277V, 400A TRANSOCKET AND METER BASE.
3. PROVIDE GENERATOR.
4. PROVIDE MANUAL TRANSFER SWITCH/PORTABLE GENERATOR CONNECTION.
5. PROVIDE MOTOR CONTROL CENTER MCC-1. SEE SCHEDULE AND ELEVATION.
6. PROVIDE AUTOMATIC TRANSFER SWITCH.
7. PROVIDE MOTOR CONTROL CENTER MCC-2. SEE SCHEDULE AND ELEVATION.
8. PROVIDE AIR GAP/ENCLOSURE FOR SPLICING OF SUBMERSIBLE PUMP CABLES WITH PUMP FEED CONDUCTORS. SEE DETAIL.
9. UNIT HEATER. MAKE FINAL CONNECTIONS.
10. NOT USED.
11. PROVIDE CONDUIT AND CONDUCTORS. SEE FEEDER SCHEDULE.
12. PROVIDE PORTABLE PUMP RECEPTACLE, 100 AMP, 600 VOLT, 3 PHASE, 3 WIRE PORTABLE 20HP PUMP RECEPTACLE. RECEPTACLE SHALL BE EATON/CROUSE HINDS APQ1037, STYLE 1, 3 POLE MOTOR PLUG WITH AJ57 BACK BOX, NO EQUAL.

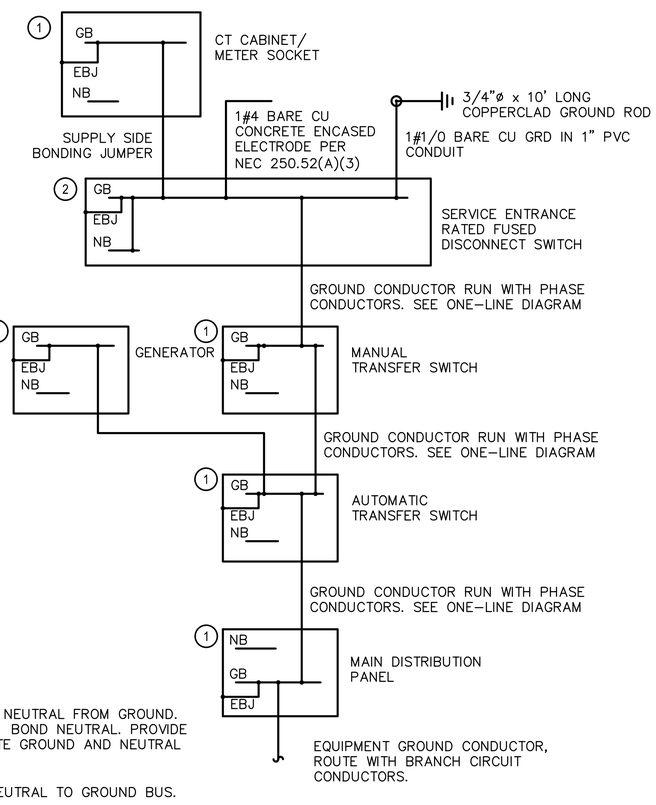

1. ISOLATE NEUTRAL FROM GROUND. DO NOT BOND NEUTRAL. PROVIDE SEPARATE GROUND AND NEUTRAL BUSES.
2. BOND NEUTRAL TO GROUND BUS.

2 GROUNDING DIAGRAM

NOT TO SCALE

ClarkDietz
500 N. 3RD STREET
SUITE 200
WAUSAU WI 54403
PHONE : 715.845.1333 www.clarkdietz.com

90% SUBMITTAL
NOT FOR CONSTRUCTION

PROJECT TITLE
CITY OF NEW BERLIN
WESTRIDGE LIFT STATION REHABILITATION
WAUKESHA COUNTY, WI

DESIGNED BY: DLT
DRAWN BY: IWD
CHECKED BY: TSW
DATE CHECKED: 11/23/21

DATE	REVISION
11/29/21	90% SET
09/30/21	50% SET

DRAWING TITLE
ONE-LINE DIAGRAM

PROJECT No.
N0430020

DRAWING No.
E-602

DWG 25 OF 31 DWGS

NOTE: DIMENSIONAL DATA IS NOT TO BE OBTAINED BY SCALING ANY PORTION OF THIS DRAWING.

PLOT DATE 11/30/2021 9:52 AM
P:\N0430020_NEW BERLIN - WESTRIDGE LIFT STATION REHA\DESIGN\CAD\SHEETS\15-ELECTRICAL\NEW ONE-LINE DIAGRAM.DWG ISAAC W. DOLAN SAVE TIME 11/29/2021 11:18:30 AM

MOTOR CONTROL CENTER MCC-1

PANEL: MCC-1
LOCATION: PIPING ROOM
FED FROM: CT CABINET

OC DEVICE TYPE: Breaker
DEVICE FAMILY: Bolt On

ENCLOSURE: NEMA 1
MOUNTING: Free Standing
VOLTAGE: 480/277

MAINS(A): BKR
WIRING: 3-Phase 4-Wire

CONTINUOUS(A): 400
BUS SC RATING(A) 42000
FAULT CURRENT(A): 20874

NO	DESCRIPTION	NOTES	HP	Max FLA	OC DEVICE TYPE	OC DEVICE AMPS	P	SIZE	STARTER TYPE	STARTER SP	AC	FEEDER/RACEWAY STANDARD DESC	%VD
1	MAIN	MAIN BREAKER		0	LSI	400	3		-	-	-		
2	SPD	SURGE PROTECTIVE DEV		0	TM	60	3		-	-	-		
3	BLANK	BLANK SPACE		0	-	0	3		-	-	-		
4	ATS	-		0	FUSE	400	3		-	-	-		
5	BLANK	BLANK SPACE		0	-	0	3		-	-	-		

ALL CONNECTED	KVA	MAX PH AMPS	* PHASE TOTALS	VA	AMPS	BUS TOTALS	KVA
TOTAL CONNECTED	0.00	0.0	* A-N	0.0	0.0	CONNECTED	120.32
TOTAL DEMAND	0.00	0.0	* B-N	0.0	0.0	DEMAND	120.32
TOTAL DESIGN	0.00	0.0	* C-N	0.0	0.0	DESIGN	135.36

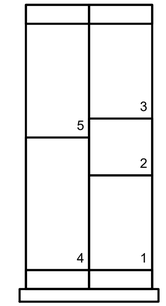

1 MCC-1 ELEVATION
NOT TO SCALE

MOTOR CONTROL CENTER MCC-2

PANEL: MCC-2
LOCATION: PIPING ROOM
FED FROM: ATS

OC DEVICE TYPE: Breaker
DEVICE FAMILY: Bolt On

ENCLOSURE: NEMA 1
MOUNTING: Free Standing
VOLTAGE: 480/277

MAINS(A): BKR
WIRING: 3-Phase 4-Wire

CONTINUOUS(A): 400
BUS SC RATING(A) 42000
FAULT CURRENT(A): 18781

NO	DESCRIPTION	NOTES	HP	Max FLA	OC DEVICE TYPE	OC DEVICE AMPS	P	SIZE	STARTER TYPE	STARTER SP	AC	FEEDER/RACEWAY STANDARD DESC	%VD
1	MAIN LUGS	MAIN LUGS		0	NONE	400	3		-	-	-		
2	T-1 PRIMARY	FEEDS T-1		0	TMCB	100	3		-	-	-		
3	T-2 PRIMARY	FEEDS T-2		0	TMCB	50	3		-	-	-		
4	UNIT HEATER	FEEDS UNIT HEATER		0	TMCB	30	3		-	-	-		
5	SPARE	SPARE		0	TMCB	30	3		-	-	-		
6	BLANK	SPACE ONLY		0	-	0	3		-	-	-		
7	T-1	SEE SCHEDULE		0	-	0	3		-	-	-		
8	BLANK	SPACE ONLY		0	-	0	3		-	-	-		
9	T-2	SEE SCHEDULE		0	-	0	3		-	-	-		
10	BLANK	SPACE ONLY		0	-	0	3		-	-	-		
11	BLANK	SPACE ONLY		0	-	0	3		-	-	-		
12	T-1 SEC	T-1 SECONDARY PROT		0	TMCB	150	3		-	-	-		
13	T-2 SEC	T-2 SECONDARY PROT		0	TMCB	100	3		-	-	-		
14	PANEL LP-1	SEE SCHEDULE		0	MLO	225	3		-	-	-		
15	VFD-1	SEE SCHEDULE		0	FUSE	100	3		-	-	-		
16	VFD-2	SEE SCHEDULE		0	FUSE	100	3		-	-	-		

ALL CONNECTED	KVA	MAX PH AMPS	* PHASE TOTALS	VA	AMPS	BUS TOTALS	KVA
TOTAL CONNECTED	0.00	0.0	* A-N	0.0	0.0	CONNECTED	147.41
TOTAL DEMAND	0.00	0.0	* B-N	0.0	0.0	DEMAND	147.41
TOTAL DESIGN	0.00	0.0	* C-N	0.0	0.0	DESIGN	162.59

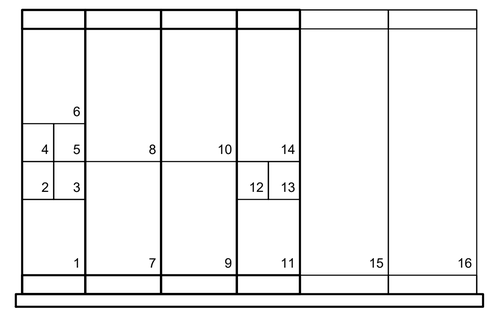

2 MCC-2 ELEVATION
NOT TO SCALE

PANELBOARD LP-1

PANEL: LP-1
LOCATION: MCC
FED FROM: T-1

OC DEVICE TYPE: Breaker
DEVICE FAMILY: Bolt On

ENCLOSURE: NEMA 1
MOUNTING: Flush
VOLTAGE: 208/120

MAINS(A): BKR
WIRING: 3-Phase 4-Wire

CONTINUOUS(A): 225
BUS SC RATING(A) 22000
FAULT CURRENT(A): 2318

OC AMPS	P	NOTES	DESCRIPTION	DEMAND CODE	VA	CKT	PHASE LOADS VA A	B	C	CKT	VA	DEMAND CODE	DESCRIPTION	NOTES	OC AMPS	P
20	1	NONE	GEN ROOM RECEPTS	GEN	720	1	1140			2	420	LTS	INDOOR LIGHTS	NONE	20	1
20	2	NONE	GEN BLOCK HEATER	GEN	2500	3		1381		4	160	LTS	OUTDOOR LIGHTS	NONE	20	1
"			"	GEN	-	5			2271	6	2288	GEN	CU-1	NONE	30	2
20	1	NONE	GEN BAT CHARGE	GEN	1201	7	2345			8	-		"		"	
20	1	NONE	PIPING ROOM RECEPTS	GEN	360	9		840		10	480	GEN	MD-1/MD-2	NONE	20	1
20	1	NONE	LSCP-1	GEN	1201	11			1441	12	240	GEN	GEN LOUVER CONTROL	NONE	20	1
20	1	NONE	OUTDOOR RECEPTS	GEN	360	13	360			14	0	GEN	SPARE	NONE	20	1
20	1	NONE	SEC-1	GEN	600	15		600		16	0	GEN	SPARE	NONE	20	1
20	1	NONE	AIR MIXER RECEPT	GEN	456	17			456	18	0	GEN	SPARE	NONE	20	1
20	1	NONE	SPARE	GEN	0	19	0			20	0	GEN	SPARE	NONE	20	1
20	1	NONE	SPARE	GEN	0	21		0		22	0	GEN	SPARE	NONE	20	1
20	1	NONE	SPARE	GEN	0	23			0	24	0	GEN	SPARE	NONE	20	1
20	1	NONE	SPARE	GEN	0	25	0			26	0	GEN	SPARE	NONE	20	1
20	1	NONE	SPARE	GEN	0	27		0		28	0	GEN	SPARE	NONE	20	1
20	1	NONE	SPARE	GEN	0	29			0	30	0	GEN	SPARE	NONE	20	1

ALL CONNECTED	KVA	MAX PH AMPS	* PHASE TOTALS	VA	AMPS	BUS TOTALS	KVA
TOTAL CONNECTED	10.59	34.2	* A-N	3844.9	32.0	CONNECTED	10.59
TOTAL DEMAND	10.59	34.2	* B-N	2706.8	22.5	DEMAND	10.59
TOTAL DESIGN	10.74	34.2	* C-N	4110.4	34.2	DESIGN	10.74

ClarkDietz
500 N. 3RD STREET
SUITE 200
WAUSAU WI 54403
PHONE : 715.845.1333 www.clarkdietz.com

90% SUBMITTAL
NOT FOR CONSTRUCTION

PROJECT TITLE
CITY OF NEW BERLIN
WESTRIDGE LIFT STATION
REHABILITATION
WAUKESHA COUNTY, WI

DESIGNED BY: DLT
DRAWN BY: IWD
CHECKED BY: TSW
DATE CHECKED: 11/23/21

DATE	REVISION
11/29/21	90% SET
09/30/21	50% SET

DRAWING TITLE
ELECTRICAL SCHEDULES (1 OF 3)

PROJECT No.
N0430020

DRAWING No.
E-603

DWG 26 OF 31 DWGS

NOTE: DIMENSIONAL DATA IS NOT TO BE OBTAINED BY SCALING ANY PORTION OF THIS DRAWING.

PLOT DATE 11/30/2021 9:52 AM
P:\N0430020_NEW BERLIN - WESTRIDGE LIFT STATION REHA\DESIGN\CAD\SHEETS\15-ELECTRICAL\NEW ONE-LINE DIAGRAM.DWG ISAAC W. DOLAN SAVE TIME 11/29/2021 11:18:30 AM

DRY TYPE TRANSFORMER SCHEDULE

TAG	LOCATION	kVA	PHASE	HZ	PRIMARY WINDING TYPE	PRIMARY WINDING VOLTAGE	SECONDARY WINDING TYPE	SECONDARY WINDING VOLTAGE	NOTES
T-1	MCC-2	45	3	60	DELTA	480	WYE	208	1
T-2	MCC-2	30	3	60	DELTA	480	DELTA	240	1

NOTES:
1. SEE APPLICABLE SPECIFICATIONS FOR ADDITIONAL INFORMATION.

VFD SCHEDULE

MOTOR										VFD			
TAG	DESCRIPTION	LOCATION	VARIABLE TORQUE	CONSTANT TORQUE	HP	FLA	VOLT	PHASE	RPM	TAG	LOCATION	MINIMUM SCCR RATING	NOTE
PUMP 1	PUMP 1	WET WELL	X		60.0	75.0	480	3	1765	VFD-1	MCC-2	42,000	1,2,3,4
PUMP 2	PUMP 2	WET WELL	X		60.0	75.0	480	3	1765	VFD-2	MCC-2	42,000	1,2,3,4

VFD ACCESSORIES SCHEDULE

TAG	H.M.I	FUSED DISC. SW	BYPASS STARTER/ CONTACTOR	VFD/BYPASS SELECTOR SWITCH	RUN TIME METER	H/O/A SWITCH	RESET SWITCH	"RUNNING" PILOT LIGHT	"SEAL LEAK" PILOT LIGHT	"VFD FAULT" PILOT LIGHT	"BYPASS FAULT" PILOT LIGHT	INPUT REACTOR	OUTPUT REACTOR
VFD-1	X	X	X	X	X	X	X	X	X	X	X	X	
VFD-2	X	X	X	X	X	X	X	X	X	X	X	X	
0													
0													

VFD I/O SCHEDULE

OUTPUTS										INPUTS								
TAG	H/O/A IN HAND POSITION	H/O/A IN AUTO POSITION	IN VFD POSITION	IN BYPASS POSITION	MOTOR RUNNING	SPEED FEEDBACK	VFD FAULT	BYPASS FAULT	ENET	ENABLE	MOTOR OVERTEMP	HAND ON/OFF	HAND START	HAND STOP	REMOTE RESET	HAND SPEED COMMAND	AUTO START	AUTO SPEED COMMAND
VFD-1	X	X	X	X	X	X	X	X	X		X	X			X	X	X	X
VFD-2	X	X	X	X	X	X	X	X	X		X	X			X	X	X	X
0																		
0																		

NOTES:
1. VFD SHALL BE PROVIDED IN THE MCC OR IN A FREESTANDING ENCLOSURE WITH THE LISTED ACCESSORIES. ALL I/O SHALL BE WIRED TO TERMINAL BLOCKS INSIDE ENCLOSURE FOR CONNECTION TO FIELD WIRING BY CONTRACTOR.
2. INSTALL PUMP MONITORING MODULE FURNISHED WITH PUMP AT MCC SECTION/FREESTANDING ENCLOSURE.
3. PROVIDE SOLID STATE/CURRENT LIMITING MOTOR STARTER FOR BYPASS.
4. PROVIDE DV/DT FILTER.

LIGHTING FIXTURE SCHEDULE

LUMINAIRE			LAMPS			DRIVER					
TYPE	MANUFACTURER	CATALOG NUMBER	TYPE	CATALOG #	WATTS	TYPE	NO.	VOLT	MOUNT	DESCRIPTION	NOTES
A	LITHONIA	CSVT-L48-5000LM-MVOLT-40K-80CRI	LED	NA	42	DIM	1	120	SUSPENDED	4 FOOT LONG VAPORTITE	1
B	LITHONIA	WPX1-LED-P2-30K-MVOLT-PE-DDBXD	LED	NA	24	DIM	1	120	WALL	OUTDOOR WALL MOUNT DARK BRONZE COLOR 4000K COLOR TEMPERATURE WITH PHOTOCELL	1
EM	LITHONIA	INDL-SP640L-UVOLT-LTP-SDRT	LED	NA					SURFACE	EGRESS LIGHTING FIXTURE	1
P	LITHONIA	DSX1-LED-P3-30K-T5W-MVOLT-SPA-NLTAIR2-PIRH-DDBXD	LED	NA	102				POLE	AREA LIGHT WITH 20' ALUMINUM POLE PROVIDE REMOTE FOR ADJUSTING FIXTURE DIMMING/OCCUPANCY SENSOR	1
X	LITHONIA	WLTE-W-1-R-EL-SD	LED	NA					POLE	EXIT FIXTURE	1

GENERAL NOTES:
1. THE ABOVE SCHEDULE REFLECTS THE BASIS OF DESIGN. SUSBTITUTIONS ARE PERMITTED ASSUMING SUBSTITUTED FIXTURES HAVE EQUIVALENT SPECIFICATIONS. ALL SUBSTITUTIONS SHALL REQUIRE ENGINEER APPROVAL.

ClarkDietz
500 N. 3RD STREET
SUITE 700
WAUSAU, WI 54403
PHONE : 715.845.1333 www.clarkdietz.com

90% SUBMITTAL
NOT FOR CONSTRUCTION

PROJECT TITLE
CITY OF NEW BERLIN
WESTRIDGE LIFT STATION REHABILITATION
WAUKESHA COUNTY, WI

DESIGNED BY: DLT
DRAWN BY: IWD
CHECKED BY: TSW
DATE CHECKED: 11/23/21

DATE	REVISION
11/29/21	90% SET
09/30/21	50% SET

DRAWING TITLE
ELECTRICAL SCHEDULES (2 OF 3)

PROJECT No.
N0430020

DRAWING No.
E-604

DWG 27 OF 31 DWGS

NOTE: DIMENSIONAL DATA IS NOT TO BE OBTAINED BY SCALING ANY PORTION OF THIS DRAWING.

P:\N0430020_NEW BERLIN - WESTRIDGE LIFT STATION REHA\DESIGN\CAD\SHEETS\15-ELECTRICAL\NEW ONE-LINE DIAGRAM.DWG ISAAC W. DOLAN SAVE TIME 11/29/2021 11:18:30 AM PLOT DATE 11/30/2021 9:52 AM

EQUIPMENT CONNECTION SCHEDULE

EQUIPMENT		LOCATION	VOLTAGE	PHASE	LOAD				SOURCE	CONDUCTORS - AWG					CONDUIT		CONTROLLER		LOCAL DISCONNECT				
TAG	DESCRIPTION				HP	KW	KVA	FLA		SETS	QTY.	SIZE	GRND	TYPE	SIZE	TYPE	TYPE	ENCLOSURE	SWITCH SIZE	POLE	FUSE (AMP)	ENCLOSURE	NOTES
LSCP-1	LIFT STATION CONTROL PANEL	CONTROL ROOM	120	1	-	-	-	10.0	LP-1	1	2	12	12	THHN	3/4	RMC	-	-	-	-	-	-	
SEC-1	SECURITY PANEL	CONTROL ROOM	120	1	-	-	-	5.0	LP-1	1	2	12	12	THHN	3/4	RMC	-	-	-	-	-	-	1
BCH-1	GENERATOR BATTERY CHARGER	GENERATOR ROOM	120	1	-	-	-	10.0	LP-1	1	2	12	12	THHN	3/4	RMC	-	-	-	-	-	-	2
EBH-1	GENERATOR ENGINE BLOCK HEATER	GENERATOR ROOM	208	1	-	2.5	-	-	LP-1	1	2	10	10	THHN	3/4	RMC	-	-	-	-	-	-	3
ACU-1	WALL MOUNTED EVAPORATOR COOLING UNIT	CONTROL ROOM	208	1	-	-	-	1.0	CU-1	1	3	12	12	THHN	3/4	RMC	-	-	-	-	-	-	4
CU-1	AIR COOLED CONDENSING UNIT	EXTERIOR	208	1	-	-	-	11.0	LP-1	1	3	10	10	THHN	3/4	RMC	-	-	30	2	NF	3R	
MD-1	MOTORIZED DAMPER WALL LOUVER WL-1	GENERATOR ROOM	120	1	-	-	-	2.0	LP-1	1	2	12	12	THHN	3/4	RMC	-	-	-	-	-	-	5
MD-2	MOTORIZED DAMPER WALL LOUVER WL-2	GENERATOR ROOM	120	1	-	-	-	2.0	LP-1	1	2	12	12	THHN	3/4	RMC	-	-	-	-	-	-	5
UH-1	UNIT HEATER	CONTROL ROOM	480	3	-	3	-	-	MCC-2	-	-	-	-	-	-	-	-	-	-	-	-	-	6

NOTES

1 COORDINATE CONNECTION REQUIREMENTS WITH PANEL SUPPLIER.
2 PROVIDE SINGLE NEMA 5-20 RECEPTACLE. COORDINATE LOCATION WITH GENERATOR SHOP DRAWINGS.
3 PROVIDE SINGLE NEMA 6-20 RECEPTACLE. VERIFY CONNECTION REQUIREMENTS AND COORDINATE LOCATION WITH GENERATOR SHOP DRAWINGS.
4 INDOOR UNIT IS POWERED FROM OUTDOOR UNIT. VERIFY WIRING REQUIREMENTS WITH SHOP DRAWINGS.
5 SEE GENERATOR ROOM LOUVER CONTROL DIAGRAM.
6 SEE ONE-LINE DIAGRAM FOR CONDUIT AND CONDUCTOR REQUIREMENTS.

ClarkDietz
500 N. 3RD STREET
SUITE 200
WAUSAU, WI 54403
PHONE : 715.845.1333 www.clarkdietz.com

90% SUBMITTAL
NOT FOR CONSTRUCTION

PROJECT TITLE
CITY OF NEW BERLIN
WESTRIDGE LIFT STATION REHABILITATION
WAUKESHA COUNTY, WI

DESIGNED BY: DLT
DRAWN BY: IWD
CHECKED BY: TSW
DATE CHECKED: 11/23/21

DATE	REVISION
11/29/21	90% SET
09/30/21	50% SET

DRAWING TITLE
ELECTRICAL SCHEDULES (3 OF 3)

PROJECT No.
N0430020

DRAWING No.
E-605

DWG 28 OF 31 DWGS

P:\N0430020_NEW BERLIN - WESTRIDGE LIFT STATION REHA\DESIGN\CAD\SHEETS\15-ELECTRICAL\NEW ONE-LINE DIAGRAM.DWG ISAAC W. DOLAN SAVE TIME 11/29/2021 11:18:30 AM
PLOT DATE 11/30/2021 9:52 AM
NOTE: DIMENSIONAL DATA IS NOT TO BE OBTAINED BY SCALING ANY PORTION OF THIS DRAWING.

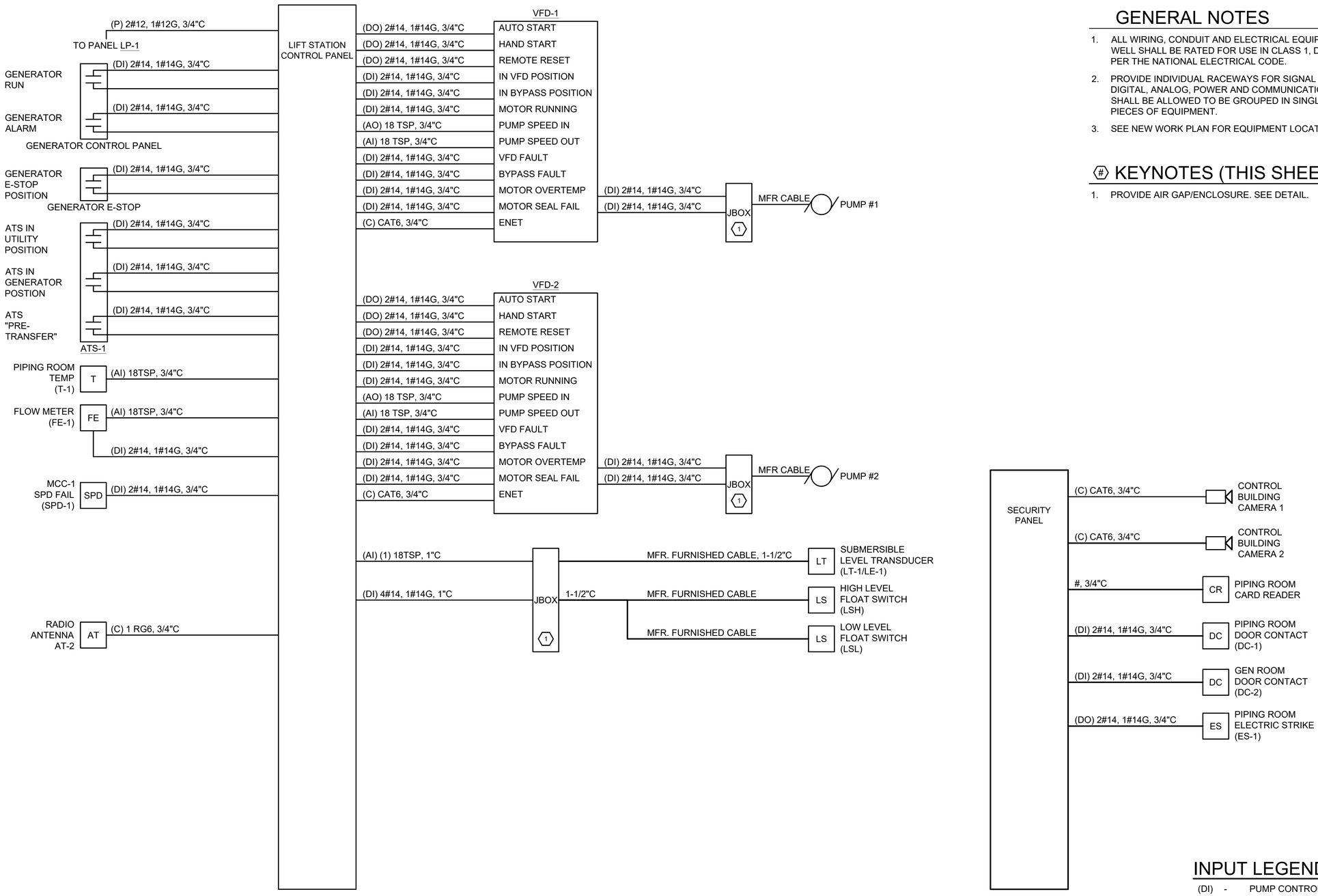

1 INTERCONNECT DIAGRAM

NOT TO SCALE

GENERAL NOTES

1. ALL WIRING, CONDUIT AND ELECTRICAL EQUIPMENT LOCATED IN THE WET WELL SHALL BE RATED FOR USE IN CLASS 1, DIV. 1, GROUP D LOCATIONS PER THE NATIONAL ELECTRICAL CODE.
2. PROVIDE INDIVIDUAL RACEWAYS FOR SIGNAL SEPARATION BETWEEN DIGITAL, ANALOG, POWER AND COMMUNICATION WIRING. LIKE SIGNALS SHALL BE ALLOWED TO BE GROUPED IN SINGLE CONDUITS TO INDIVIDUAL PIECES OF EQUIPMENT.
3. SEE NEW WORK PLAN FOR EQUIPMENT LOCATIONS.

KEYNOTES (THIS SHEET)

1. PROVIDE AIR GAP/ENCLOSURE. SEE DETAIL.

INPUT LEGEND (THIS DRAWING):

(DI) - PUMP CONTROL PANEL DIGITAL INPUT
(DO) - PUMP CONTROL PANEL DIGITAL OUTPUT
(AI) - PUMP CONTROL PANEL ANALOG INPUT
(AO) - PUMP CONTROL PANEL ANALOG OUTPUT
(P) - POWER WIRING
(C) - COMMUNICATION CABLING

ClarkDietz
500 N. 3RD STREET
SUITE 200
WAUSAU, WI 54403
PHONE : 715.845.1333 www.clarkdietz.com

90% SUBMITTAL
NOT FOR CONSTRUCTION

PROJECT TITLE
CITY OF NEW BERLIN
WESTRIDGE LIFT STATION REHABILITATION
WAUKESHA COUNTY, WI

DESIGNED BY: DLT
DRAWN BY: IWD
CHECKED BY: TSW
DATE CHECKED: 11/23/21

DATE	REVISION
11/29/21	90% SET
09/30/21	50% SET

DRAWING TITLE
INTERCONNECT DIAGRAM

PROJECT No.
N0430020

DRAWING No.
E-606

DWG 29 OF 31 DWGS

NOTE: DIMENSIONAL DATA IS NOT TO BE OBTAINED BY SCALING ANY PORTION OF THIS DRAWING.

P:\N0430020_NEW BERLIN - WESTRIDGE LIFT STATION REHA\DESIGN\CAD\SHEETS\15-ELECTRICAL\NEW ONE-LINE DIAGRAM.DWG ISAAC W. DOLAN SAVE TIME 11/29/2021 11:18:30 AM PLOT DATE 11/30/2021 9:52 AM

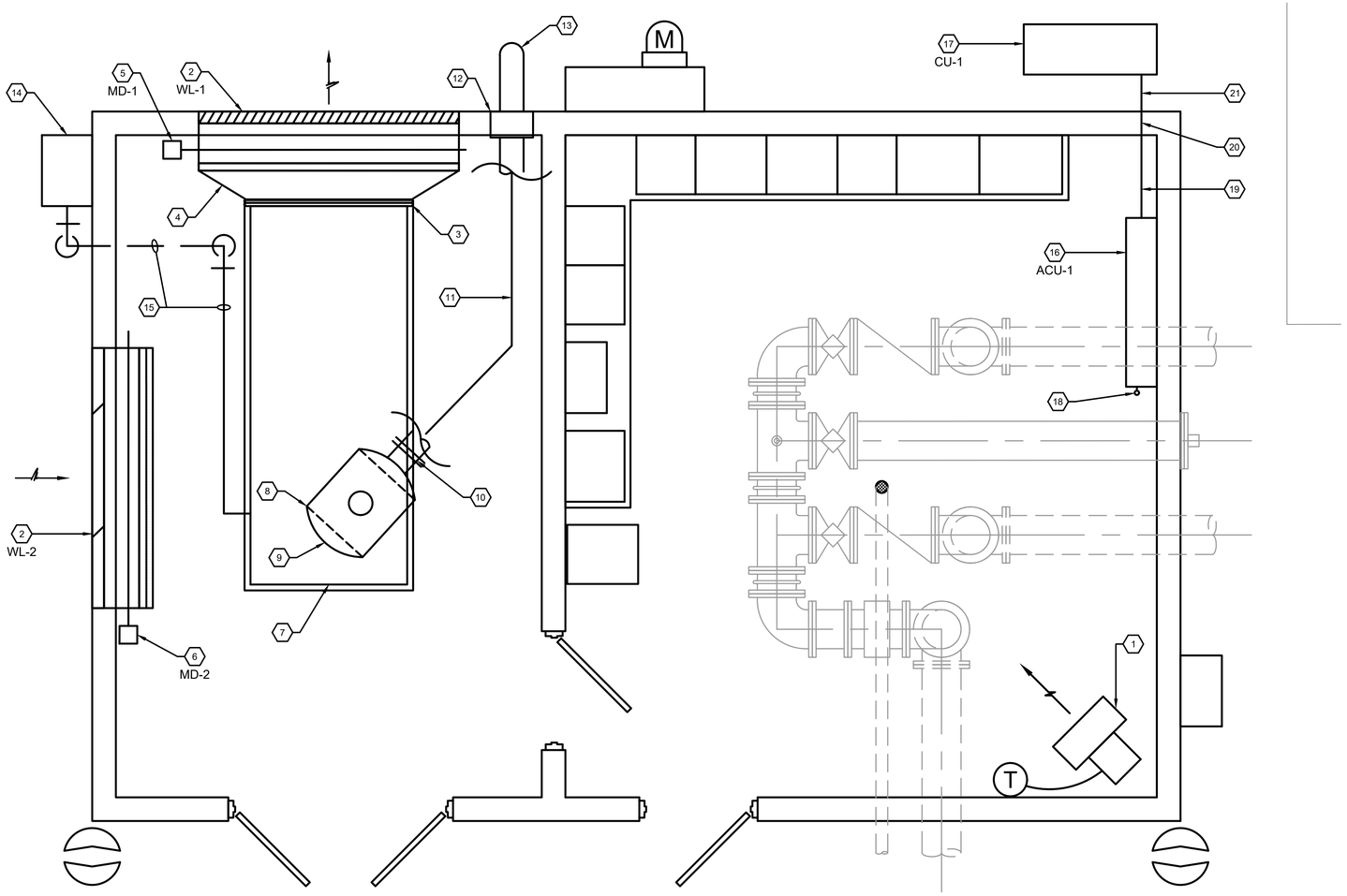

1 CONTROL BUILDING HVAC PLAN

0' 10' 20'

GENERAL NOTES

1. ALL RECEPTACLES AND SWITCHES SHALL BE MOUNTED 48" ABOVE FINISHED FLOOR TO THE TOP OF THE BOX.
2. ALL BOXES AND CONDUIT SHALL BE ALLOWED TO BE SURFACE MOUNTED.
3. ALL EXIT AND EMERGENCY LIGHTING SHALL BE CONNECTED TO AN UNSWITCHED LEG OF THE LIGHTING CIRCUIT IN THAT AREA.

KEYNOTES (THIS SHEET)

1. PROVIDE NEW ELECTRIC UNIT, INCLUDING MANUFACTURER'S HANGER BRACKET, WALL MOUNTED THERMOSTAT AND CONTROL WIRING. SEE SCHEDULE. ROUTE CONDUIT EXPOSED ON WALL.
2. WALL LOUVER. SEE SCHEDULE AND STRUCTURAL SHEETS.
3. DUCT CONNECTION TO GEN-SET RADIATOR +/- 60/50 WITH FLEXIBLE CONNECTIONS.
4. TRANSITION TO LOUVER SIZE.
5. MOTORIZED DAMPER. SEE SCHEDULE.
6. MOTORIZED DAMPER AND FILTER HOLDING FRAMES. SEE SCHEDULE.
7. GEN-SET WITH INTEGRAL RADIATOR. SEE ELECTRICAL DRAWINGS.
8. INSTALL ENGINE EXHAUST PIPE CONNECTION, COMPANION FLANGE AND FLEXIBLE CONNECTION FURNISHED BY GENERATOR MANUFACTURER. PROVIDE ENGINE EXHAUST FLANGED SPOOL PIECE AND MAKE CONNECTION TO FLEXIBLE CONNECTIONS AND SILENCER.
9. INSTALL SILENCER FURNISHED BY GENERATOR MANUFACTURER. SUSPEND FROM STRUCTURE ABOVE.
10. FLANGED CONNECTION TO SILENCER AND INCREASER TO 8" ENGINE EXHAUST.
11. 8" ENGINE EXHAUST EXPOSED AT CEILING.
12. PIPE THIMBLE THROUGH WALL.
13. EXTEND 2'-0" BEYOND ROOF OVERHANG AND TERMINATE WITH 45 DEGREE TAPERED OUTLET WITH S.S. 1/2" HARDWARE CLOTH BIRD SCREEN.
14. WE ENERGIES GAS METER. CONTRACTOR SHALL COORDINATE INSTALLATION OF NEW SERVICE WITH WE ENERGIES AND THE OWNER. WE ENERGIES FEES SHALL BE PAID FOR BY THE OWNER.
15. PROVIDE GAS PIPING TO CONNECT NATURAL GAS SERVICE TO NEW GENERATOR. SEE DETAIL.
16. PROVIDE NEW MINI SPLIT SYSTEM EVAPORATOR UNIT AND MOUNT ON WALL. COORDINATE EXACT LOCATION AND ELEVATION IN FIELD TO MAINTAIN MANUFACTURER'S REQUIRED CLEARANCES. ROUTE REFRIGERANT AND SUCTION LINES TO EXTERIOR OF BUILDING FROM UNIT.
17. PROVIDE NEW CONDENSING UNIT ON CONCRETE PAD. LOCATE IN ACCORDANCE WITH MANUFACTURER'S CLEARANCE REQUIREMENTS. SEE SCHEDULE.
18. 3/4" CONDENSATE DRAIN DOWN TO FLOOR.
19. REFRIGERANT PIPING AND POWER/CONTROL WIRING EXPOSED ON WALL.
20. PIPING AND WIRING THRU WALL.
21. PIPING EXPOSED ALONG WALL AT BUILDING EXTERIOR.

ClarkDietz
500 N. 3RD STREET
SUITE 200
WAUSAU WI 54403
PHONE : 715.845.1333 www.clarkdietz.com

90% SUBMITTAL
NOT FOR CONSTRUCTION

PROJECT TITLE
CITY OF NEW BERLIN
WESTRIDGE LIFT STATION REHABILITATION
WAUKESHA COUNTY, WI

DESIGNED BY:	DLT
DRAWN BY:	IWD
CHECKED BY:	TSW
DATE CHECKED:	11/23/21

DATE	REVISION
11/29/21	90% SET
09/30/21	50% SET

DRAWING TITLE
LIFT STATION HEATING, VENTILATION AND COOLING PLAN

PROJECT No.
N0430020

DRAWING No.
H-103

DWG 30 OF 31 DWGS

NOTE: DIMENSIONAL DATA IS NOT TO BE OBTAINED BY SCALING ANY PORTION OF THIS DRAWING.

P:\N0430020_NEW BERLIN - WESTRIDGE LIFT STATION REHA\DESIGN\CAD\SHEETS\15-ELECTRICAL\H-PLAN.DWG ISAAC W. DOLAN SAVE TIME 11/29/2021 1:00:01 PM PLOT DATE 11/30/2021 9:53 AM

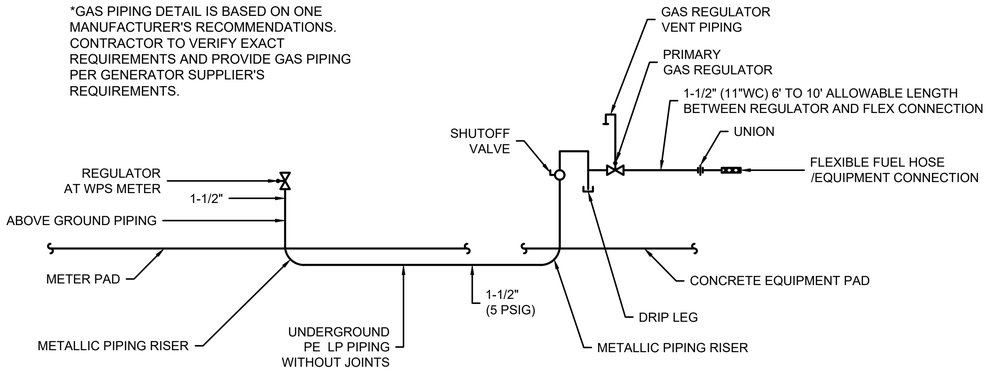

GENERATOR GAS PIPING DETAIL

NOT TO SCALE

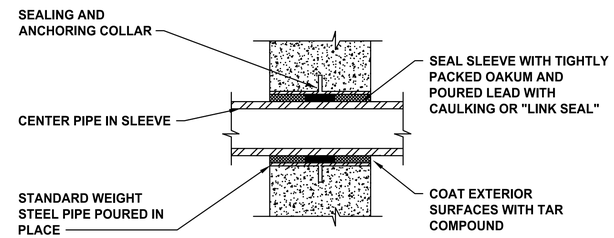

PIPE SLEEVE THRU EXTERIOR WALLS

NOT TO SCALE

LOUVER SCHEDULE

TAG	SERVICE / LOCATION	MATERIAL	TYPE	AIR VOL. (CFM)	SIZE (IN) W	SIZE (IN) H	SIZE (IN) D	MAX. VEL. (FPM)	FREE AREA (SQ. FT.)	NOTES	DESIGN BASIS MANUFACTURER	DESIGN BASIS MODEL NUMBER
WL-1	EXHAUST / GENERATOR	ALUMINUM	FLUSH	11,700	54	54	6	1201	9.74	1,3,4	GREENHECK	ELC6375DAX
WL-2	INTAKE / GENERATOR	ALUMINUM	FLUSH	12,150	60	54	6	1119	10.86	1,2,3	GREENHECK	ELC6375DAX

NOTES:
1. PROVIDE WITH MATCHING MOTORIZED DAMPER(S). PROVIDE MULTIPLE SECTIONS FOR LOUVERS AND DAMPERS AS REQUIRED BY SIZE.
2. PROVIDE WITH SHOP FABRICATED FILTER HOLDING FRAMES.
3. ANODIZED FINISH/COLOR TO BE SELECTED BY THE OWNER.
4. PROVIDE BIRDSCREEN.

UNIT HEATER SCHEDULE - ELECTRIC

TAG	LOCATION	AIRFLOW PATTERN	FAN DATA AIR VOL. (CFM)	FAN DATA THROW (FT.)	FAN DATA MOTOR AMPS	EAT/LAT (°F DB)	RATING (KW)	NO. OF STAGES	ELECTRIC DATA V	PH	HZ	FLA	MCA	MCOP (AMPS)	MOUNTING HEIGHT	NOTES	DESIGN BASIS MANUFACTURER	DESIGN BASIS MODEL NUMBER
UH-1	CONTROL ROOM	HORZ.	700	--	0.39	60/83	5	1	480	3	60	6.0	--	--	10'-0"	1, 2, 3	QMARK	QWD0543

NOTES:
1. PROVIDE WITH WALL MOUNTED THERMOSTAT, AND WALL BRACKET.
2. ACCEPTABLE MANUFACTURERS: BERKO, MARLEY, MODINE.
3. WASH-DOWN CORROSION RESISTANT.

WALL MOUNTED EVAPORATOR COOLING UNIT SCHEDULE

TAG	SERVICE / LOCATION	COOLING CAPACITY AIR VOL. (CFM)	COOLING CAPACITY TOTAL MBH	HUMIDIFIER	REHEAT	ELECTRIC DATA V	PH	HZ	MCA	MCOP (AMPS)	REMARKS	DESIGN BASIS MANUFACTURER	DESIGN BASIS MODEL NUMBER
ACU-1	CONTROL ROOM / CONTROL ROOM	425	18.0	NONE	NONE	208	1	60	1	15	NOTES 1,2	MITSUBISHI	TPKA0181HA70A

NOTES:
1. SEE REMOTE AIR COOLED CONDENSING UNIT SCHEDULE THIS SHEET FOR ASSOCIATED EQUIPMENT.
2. PROVIDE WIRED REMOTE CONTROLLER.

AIR COOLED CONDENSING UNIT SCHEDULE

TAG	SERVICE / LOCATION	AIR VOL. (CFM)	NO. CONDENSING FANS	NO. REFRIG. CIRCUITS	REFRIG. TYPE	ELECTRICAL DATA V	PH	HZ	MCA	MOCP	REMARKS	DESIGN BASIS MANUFACTURER	DESIGN BASIS MODEL NUMBER
CU-1	ACU-1 / EXTERIOR GRADE	1590	1	1	R-410A	208	1	60	11.0	28	NOTE 1,2	MITSUBISHI	TRUYA0181KA70NA

NOTES:
1. FURNISH WITH LOW AMBIENT CONTROLS DOWN TO -20°F DB AND PROVIDE WITH MANUFACTURER'S RECOMMENDED ACCESSORIES.
2. PROVIDE WITH MANUFACTURER'S WALL MOUNTING KIT.

ClarkDietz
500 N. 3RD STREET
SUITE 200
WAUSAU WI 54403
PHONE : 715.845.1333 www.clarkdietz.com

90% SUBMITTAL
NOT FOR CONSTRUCTION

PROJECT TITLE
CITY OF NEW BERLIN
WESTRIDGE LIFT STATION REHABILITATION
WAUKESHA COUNTY, WI

DESIGNED BY: DLT
DRAWN BY: IWD
CHECKED BY: TSW
DATE CHECKED: 11/23/21

DATE	REVISION
11/29/21	90% SET
09/30/21	50% SET

DRAWING TITLE
HVAC SCHEDULES AND DETAILS

PROJECT No.
N0430020

DRAWING No.
H-501

DWG ---- OF 31 DWGS

NOTE: DIMENSIONAL DATA IS NOT TO BE OBTAINED BY SCALING ANY PORTION OF THIS DRAWING.

P:\N0430020_NEW BERLIN - WESTRIDGE LIFT STATION REHA\DESIGN\CAD\SHEETS\15-ELECTRICAL\H-DETAILS.DWG ISAAC W. DOLAN SAVE TIME 11/30/2021 9:42:21 AM PLOT DATE 11/30/2021 9:53 AM

CITY OF NEW BERLIN
PROCEEDINGS OF THE PLAN COMMISSION
Monday, December 6, 2021

Please note: Minutes are unofficial until approved by the Plan Commission at the next regularly scheduled meeting.

This Commission satisfied the requirements as directed by the Common Council on June 22, 2021 and Ordinance No. 2651 to hold this meeting via electronic means. The full text of this ordinance and the minutes from the above mentioned meeting can be viewed at www.newberlin.org

To participate in the meeting, view the meeting, and/or ask questions, the public was able to do so by downloading the ZOOM app located at https://zoom.us/ and utilize Meeting ID #884 1685 1562 to join.

All votes were taken via a voice roll call vote.

PUBLIC HEARING(S)

- (3) GK/NJ TIF2-2102121 Public Hearing regarding the proposed project plan, boundaries and creation of Tax Incremental District No. 5 (See the Public Hearing Notice which was published on November 17, 2021 & November 24, 2021). (PUBLIC HEARING 6:00 PM)

Deputy Clerk/Licensing Specialist, Rubina Medina reviewed the procedures to be conducted as this meeting was held via zoom.

Mayor Ament read the rules for a public hearing and called the public hearing to order at 6:00 PM.

Director of Community Development, Greg Kessler read the Public Hearing Notice and Deputy Director of Community Development, Nikki Jones gave a brief presentation to the Commission and Greg Johnson, Senior Municipal Advisor with Ehlers provided a detailed presentation.

Mayor Ament asked if there were any citizens in attendance that had questions for clarification. No questions were asked.

Mayor Ament asked if any citizens in attendance wished to speak in favor of the application. There were none.

Mayor Ament asked if any citizens in attendance wished to speak in opposition of the application. There were none.

Mayor Ament asked the Commissioners if they had any questions for clarification and/or comments. Commissioners did have questions which were answered.

The Public Hearing Adjourned at 6:38 PM.

PRIVILEGE OF THE FLOOR

Mayor Ament asked if there was anyone in attendance that wanted to take part in Privilege of the Floor. There was none.

Rubina Medina stated that no comments were received via email.

CALL TO ORDER; PLEDGE OF ALLEGIANCE

Mayor Ament called the Plan Commission meeting to order at 6:39 PM and led the Pledge of Allegiance.

ROLL CALL; DECLARATION OF QUORUM

Commissioners Present: Mayor Ament, Commissioners Felda, McGrath, Rafel, Anderson, Biller & Ald. Stribl.

Rubina Medina stated that there is a quorum and the meeting was properly noticed in accordance with the open meetings law.

City Staff present: Director of Community Development Greg Kessler, Deputy Director of Community Development Nikki Jones, City Attorney Mark Blum, and Deputy City Clerk/Licensing Specialist Rubina Medina.

APPROVAL OF MINUTES

- November 1, 2021 Meeting Minutes

Motion to Approve the Plan Commission minutes from November 1, 2021 by Commissioner Felda. Seconded by Commissioner Biller.

Motion Passed 6-0 with Commissioner Anderson abstaining.

PLAN COMMISSION SECRETARY'S REPORT

No Report

NEW BUSINESS

- (3) GK/NJ TIF2-2102121 Consideration and possible action on "Resolution Designating Proposed Boundaries and Approving a Project Plan for Tax Incremental District No. 5, City of New Berlin, Wisconsin". (PUBLIC HEARING 12/6/2021)

Motion by Ald. Stribl to recommend approval of Plan Commission Resolution No. 21-02 designating proposed boundaries and approving a Project Plan for Tax Incremental District No. 5, City of New Berlin, and forward to the Common Council for their review and approval by Resolution. Seconded by Commissioner Rafel.

Motion Passed 6-1 with Commissioner McGrath voting nay.

ADJOURN

Motion to adjourn at 6:58 PM by Commissioner Felda. Seconded by Commissioner Rafel.

Motion Passed 7-0.

Respectfully Submitted,
Rubina Medina
Deputy City Clerk/Licensing Specialist

STAFF REPORT
EXECUTIVE SUMMARY

APPLICANT/PROJECT:	**Lance McTrusty – Bauer Sign and Lighting / Minuteman Press Sign Waiver Request**
LOCATION:	**13823 W. National Avenue (Tax Key #: 1202.987)**
REQUEST:	**Approval of a Waiver Request to allow for an additional wall sign, for a total of two wall signs, for Minuteman Press located at 13823 W. National Avenue.**
D.R.C RECOMMENDATION:	**Recommend denial of this Waiver Request for Minuteman Press located at 13823 W. National Avenue, subject to the application, plans on file and the following reasons:**

WAIVER REQUEST: Applicant is requesting a waiver from Section 275-61I(2)(a) of the Zoning Code, which states that "only two signs may be permitted per business. Owners may elect for them to be any combination of wall signs, ground signs, or monument signs, not exceeding a total of two, and approved by DCD staff."

1. **The applicant (Minuteman Press) is proposing to install a second wall sign on the west elevation. Applicant's letter and proposal are attached.**
2. **Per §275-61I(1)(c)[6] of the Zoning Code, applicants may request a waiver from the Plan Commission for the requirement for a monument sign. If a waiver is granted, the monument sign may not be substituted for an additional wall sign.**
   a. **A previous wall sign waiver (File # SG-79-04) was reviewed by the Plan Commission on December 8, 2004. The request for a wall sign was approved with the condition that *"it is not practical to locate a monument sign on this property as required by Section 275-61(I)(1)(c)(1) of the Municipal Code. Based on recommendation from the Transportation Division Engineer, staff is requesting that this requirement be waiver for this particular tenant and allow the installation of this wall sign."***
3. **Per §275-61I(2)(c), separate wall canopy or fascia signs may be allowed for each tenant in a retail, shopping, industrial or commercial center, subject to the approval of an overall coordinated sign plan by the DCD staff for the building. The size of wall signs approved in this manner shall be figured using the width of the bay occupied by each tenant.**
4. **The business has obtained a permit to install a wall sign on the north (front) elevation.**
5. **Pursuant to 275-61D(5) of the Zoning Code: *"An applicant may appeal a decision made by staff to the Plan Commission or the Community Development Authority (where applicable) for determination. An additional review fee as determined by the Director shall be required for any sign application that is forwarded to the Plan Commission or the Community Development Authority (where applicable) for review."***
6. **Pursuant to 275-61D(6) of the Zoning Code: *"An applicant may request a waiver from the Plan Commission or Community Development Authority (where applicable) for the requirements set forth in this section."***

Background:

1. **Per §275-52C, Waivers/modifications:**
   - ***(1) The Plan Commission may waive or modify any or all of the other requirements of this article if it determines that:***
     - ***i. The site or activity in question will have no appreciable off-site impact;***
     - ***ii. Compliance with the requirement(s) is impractical or impossible due to site conditions or other circumstances beyond the control of the applicant; or***
     - ***iii. The specific requirement is not necessary for a particular site to ensure compliance with the requirements of this chapter.***
2. **Within the last year, the building has been converted to a multi-tenant building with at least 4 tenants.**
3. **A previous wall sign waiver (SG-79-04) was reviewed by the Plan Commission on December 8, 2004. The request for a wall sign was approved with the condition that *"it is not practical to locate a monument sign on this property as required by Section 275-61(I)(1)(c)(1) of the Municipal Code. Based on recommendation from the Transportation Division Engineer, staff is requesting that this requirement be waiver for this particular tenant and allow the installation of this wall sign."***

Attachments:
Location Map
Applicant Letter
Sign Rendering

City of New Berlin
Community Development

SG-2102512
Minuteman Press
13823 W. National Avenue

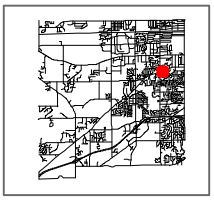

Legend

- Parcels
- Road Right-of-Way

Floodplain DFIRM (FEMA 2014)

Flood Zone

- FEMA DFIRM - Zone A
- FEMA DFIRM - Zone AE
- FEMA DFIRM - 0.2% Annual Chance
- Zoning Boundaries

Zoning Wetland Registration

Wetland Registration Type

- Registered Wetland
- Outside Wetland

Environmental Corridor

Corridor Type

- Isolated Natural Resource Area
- Primary Environmental Corridor
- Secondary Environmental Corridor

Sewer Service Area (MMSD)

Sewershed

- Current
- Ultimate

City of New Berlin
Department of Community Development
3805 S Casper Dr.
New Berlin WI 53151
(262) 797-2445
www.newberlin.org

N

0 45 90 Feet

The information and depictions herein have been produced using data available through photogrametric means by the City of New Berlin. The informations and depictions herein are for informational purposes and the City of New Berlin specifically disclaims accuracy in this reproduction and specifically admonishes and advises that any and all depiction, measurements, distances depicted herein and as to which specific or precise accuracy is required should be determined by procurement of certified maps, surveys, plats, Flood Insurance Studies, or other official means.

Map Printed: 12/17/2021 9:34:15 AM

BAUER Sign & Lighting COMPANY

2500 South 170th Street
New Berlin, Wisconsin 53151
Proudly Made In the USA!

September 29, 2021

New Berlin Planning Commission
3805 S. Casper Drive
New Berlin, WI 53151

Dear Planning Commission:

We are here today to ask for your approval to have a second sign on the North-East side of the Minuteman space. Previously this was allowed and approved by the Planning Commission for the former tenant, Interstate Music to have a second sign due to the same hardships, see attachment A.

There are several hardships this shopping center has, that should reinforce our request to be allowed the second sign. The positioning of the building as compared to the road is not horizontal to National Ave, making it hard to see any of the tenants store front signs, see attachment B, as you can see you cannot see the former Interstate Music sign over their main entrance, but you can see the side sign well.

The other hardship is there is no safe place to place a monument sign by the road. There is an electrical easement and vision triangle on the far North-East side of the property, then just a narrow strip of grass along the entire storefronts that leads to another electrical easement and sight triangle on the South-West side of the property, see attachments B & C. Per code this property is allowed a monument but there is no reasonable place that one could go, that is safe for the community.

Due to the fact that Interstate Music was granted a waiver for the additional side sign, which was much larger then what we are proposing, and the fact that the building slants away from the road not allowing motorists to see the main signage over storefronts from a distance, and that fact that there is no safe place to install a monument sign, which code allows, we strongly feel that we should be granted the second wall sign per the attached drawing, due to the hardships. There is a store Michelsen's Office Furniture 2 blocks away at 14059 W. National Ave, that has a monument sign and 4 wall signs, see attachment D, this is another reason why our request is not overwhelming.

We thank for your time, and effort, as you review and consider our simple request for a second wall sign.

Sincerely,

Paul Butler

BAUER Sign & Lighting COMPANY

2500 South 170th
New Berlin, Wisconsin
Proudly Made in the USA!

Web: www.bauersignusa.com
Phone: 262-784-0500
Fax: 262-784-6675

File	Minuteman Press
Location	New Berlin
Client	
Sales rep	Paul Butler
Date	cb 09/17/21
Revision	cb 09/21/21

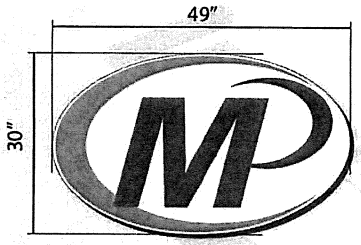

SPECIFICATIONS

FABRICATE AND INSTALL (1SET) INTERNALLY ILLUMINATED, RACEWAY MOUNTED CHANNEL LETTERS.

- ***FACES*** *TO BE #7328 WHITE ACRYLIC*
- ***LOGO*** *MODULE FACE TO BE DECORATED WITH TRANSLUCENT VINYL OVERLAYS TBD - BEST MATCH TO PMS 341C AND PMS 165C*
- ***RETURNS*** *TO BE .040X3" AND BACKS TO BE .050 ALUMINUM*
- ***TRIMCAPS*** *TO BE 1" WHITE PAINTED PMS 341C*
- ***EXTERIORS*** *PAINTED PMS 341C*
- ***INTERIORS*** *PAINTED WHITE*
- ***ILLUMINATED*** *WITH WHITE LEDs*
- ***POWERED*** *WITH APPROPRIATE LOAD POWER SUPPLIES*
- ***RACEWAY*** *TO BE 5"x 3.5" x 49" AND PAINTED TBD TO MATCH FACADE*

Printed artwork colors are not always representative of final product colors. Please refer to specifications for call out or salesman for samples.

These drawings are the exclusive property of Bauer Sign Company. Not to be duplicated in any way without expressed written permission!

FINAL ELECTRICAL CONNECTION IS CLIENT'S RESPONSIBILITY

our products are certified by: Underwriters Laboratories, Inc.

This sign shall be manufactured in accordance with the Article 600 of the National Electrical Code and/or the applicable local codes. This includes proper grounding and bonding of the sign. Sign shall bear correct UL Labels

Scale: 1/2" - 1'

STAFF REPORT
EXECUTIVE SUMMARY

APPLICANT/PROJECT:	**Chris Hampton – Springfield Sign / Culvers Sign Waiver Request**
LOCATION:	**14855 W. National Avenue (Tax Key #: 1206.994)**
REQUEST:	**Approval of a Waiver Request to allow for an EMC for Culvers at 14855 W. National Avenue.**
D.R.C RECOMMENDATION:	**Recommend denial of the Waiver Request for Culvers located at 14855 W. National Avenue, subject to the application, plans on file and the following reasons:**

WAIVER REQUEST: Applicant is requesting a waiver from Section 275-61I(1)(g)[7] of the Zoning Code, which states that a sign containing an EMC shall not be located closer than 100 feet from a residentially zoned property. The distance shall be calculated as the shortest measurable distance between the face of the sign to the edge of the residential zoning district, in a straight line without regard to intervening structures. Right-of-way is not included and shall be subtracted from this measurement.

1. **The applicant (Culvers) is proposing to replace their existing reader with an EMC (electronic message centers). Applicant's letter and proposal are attached.**
2. **Pursuant to 275-61D(5) of the Zoning Code: *"An applicant may appeal a decision made by staff to the Plan Commission or the Community Development Authority (where applicable) for determination. An additional review fee as determined by the Director shall be required for any sign application that is forwarded to the Plan Commission or the Community Development Authority (where applicable) for review."***
3. **Pursuant to 275-61D(6) of the Zoning Code: *"An applicant may request a waiver from the Plan Commission or Community Development Authority (where applicable) for the requirements set forth in this section."***

<u>Background:</u>

1. **Per §275-52C, Waivers/modifications:**
   - ***(1) The Plan Commission may waive or modify any or all of the other requirements of this article if it determines that:***
     - ***(a) The site or activity in question will have no appreciable off-site impact;***
     - ***(b) Compliance with the requirement(s) is impractical or impossible due to site conditions or other circumstances beyond the control of the applicant; or***
     - ***(c) The specific requirement is not necessary for a particular site to ensure compliance with the requirements of this chapter.***

<u>Attachments:</u>
Location Map
Applicant Letter
Plans

City of New Berlin
Community Development

SG-2102518
Culvers
14855 W. National Avenue

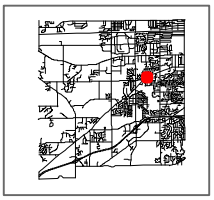

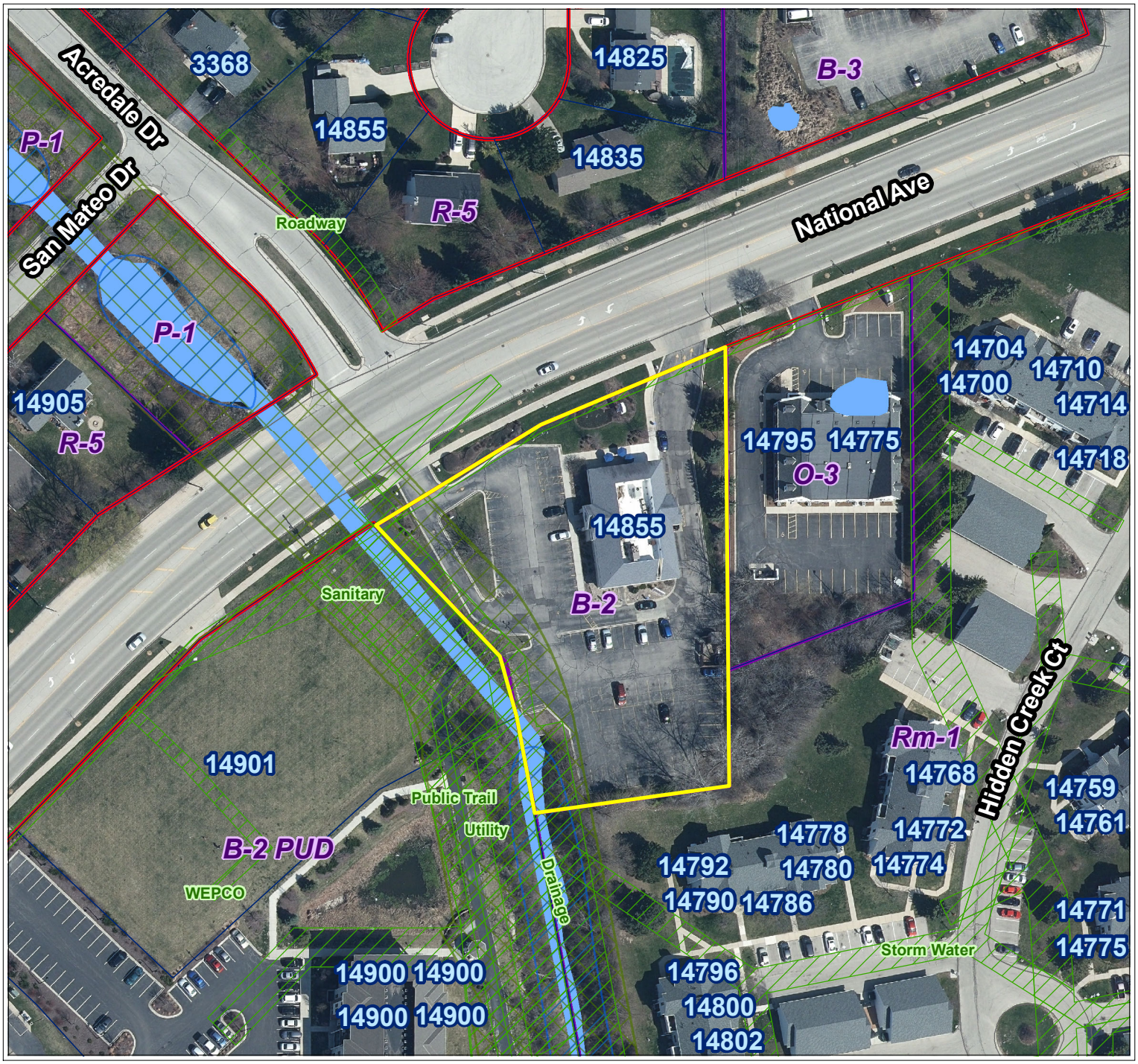

Legend

- Parcels
- Road Right-of-Way

Floodplain DFIRM (FEMA 2014)

Flood Zone

- FEMA DFIRM - Zone A
- FEMA DFIRM - Zone AE
- FEMA DFIRM - 0.2% Annual Chance
- Zoning Boundaries

Zoning Wetland Registration

Wetland Registration Type

- Registered Wetland
- Outside Wetland

Environmental Corridor

Corridor Type

- Isolated Natural Resource Area
- Primary Environmental Corridor
- Secondary Environmental Corridor

Sewer Service Area (MMSD)

Sewershed

- Current
- Ultimate

City of New Berlin
Department of Community Development
3805 S Casper Dr.
New Berlin WI 53151
(262) 797-2445
www.newberlin.org

N

0 40 80 Feet

The information and depictions herein have been produced using data available through photogrametric means by the City of New Berlin. The informations and depictions herein are for informational purposes and the City of New Berlin specifically disclaims accuracy in this reproduction and specifically admonishes and advises that any and all depiction, measurements, distances depicted herein and as to which specific or precise accuracy is required should be determined by procurement of certified maps, surveys, plats, Flood Insurance Studies, or other official means.

Map Printed: 12/17/2021 9:19:32 AM

City of New Berlin
Department of Community Development

We are requesting that we are allowed to have an Electronic Message Center (EMC) to replace the existing Manual Reader Board (MRB) at the Culver's Restaurant located 14855 W. National Avenue. The current zoning of this property is B-2.

Electronic message centers are safer to the employees than manual reader boards that have to be changed by hand in inclement weather or on ladders which could cause a hazardous fall. Electronic message centers are programmable to meet City requirements along with automatic dimming for day-time and night-time hours for public safety. Visual knowledge from the electronic message center provides proper way finding and improves public safety to the public traveling along West National Avenue. Images on an electronic message center are a better communication tool than text for the following reasons:

• Pictures (graphics) are more universal allowing quicker comprehension of message
(safer messaging).
• Picture (graphics) overcome language barriers (tourists or foreign nationals can
better understand business function)
• Pictures overcome learning disabilities or education discrepancies and enhance the
experience and comprehension of the message to those who otherwise may miss
the message.
• A picture is a worth a thousand words.
• Product/Consumer education is enhanced with pictures and graphics.
Then general welfare of the community is better served when product and customer service messages are readily available.
Culver's is willing to work with the City to provide visual knowledge

by displaying Amber Alerts or other needed messages to the community.

In regards to the residential zoning proximity, the sign will be perpendicular to W. National Avenue and poses no more light than an illuminated Manual Reader Board, due to the positioning of the sign and screening of the residential area with privacy fences and trees.

We are respectfully asking for you to review our requests, see our need, and approve our request.

Respectfully,

Chris Hampton

Chris Hampton

Springfield Sign
4825 E. Kearney St., Springfield, Mo. 65803,
chrish@springfieldsign.com
417-862-2454

SPRINGFIELDSIGN
design | build | install | service

PYLON RE-IMAGE

NEW BERLIN, WI

Proposed Signage

PYLON

Pole skirt enclosure provides cradle rest for iconic Culver's logo
- All aluminum construction

RGB full color 16mm Electronic Message Center (EMC) with RF wireless communication

Broadband communication option available

UL marked product

SCALE: 1/4" = 1'

*SCALE AND COLORS NOT REPRESENTATIVE FROM EMAIL ATTACHMENTS
*ALL MEASUREMENTS ARE APPROXIMATE

NIGHT VIEW

SCALE N.T.S.

EXISTING SIGNAGE

SCALE N.T.S.

EMC CHARTS - KNOWN RESTRICTIONS

COLOR: Y N STATIC: Y N VIDEO: Y N ANIMATION: Y N

MOVEMENT: Y N

HOLD TIME (IF STATIC): _____ TRANSITION TYPE: _____

DAYTIME BRIGHTNESS: _____ NIGHTTIME: _____

ADDITIONAL RESTRICTIONS:

SCOPE OF WORK

- REMOVE EXISTING MRB, AND CRADLES
- INSTALL NEW CRADLE
- INSTALL NEW FULL COLOR RGB EMC (ELECTRONIC MESSAGE CENTER)
- REPAIR /REPLACE /REPAINT EXISTING CLADDING AS NECESSARY
- ADD CLADDING SKIRT PER PERMITTING REQUIREMENTS

NOTES

SITE SURVEY INFO

FIELD VERIFIED SURVEY EXISTING: NO
DATE SURVEY RECEIVED:

DATE CREATED / REVISION HISTORY

9/25/20 - NEW			
5/18/21 - REV 1 - New flex face			
6/25/21 - REV 2 - Skirt added			

SALES PERSON:	DESIGNED BY:	AO:
MARK WESSELL	J. KROEGER	27343

T:o27343 - Culver s of New Berlin WI 032 (1836)\Art

© 2020 Springfield Sign & Graphics Inc., Springfield Sign

This drawing is Copyrighted material, it remains the property of Springfield Sign & Graphics Inc. unless otherwise agreed upon in writing. It is unlawful to use this drawing for bidding purposes, nor can it be reproduced, copied or used in the production of a sign without written permission from Springfield Sign.

This is an artistic rendition and final colors / sizes may vary from that depicted herein.

SPRINGFIELDSIGN
www.springfieldsign.com

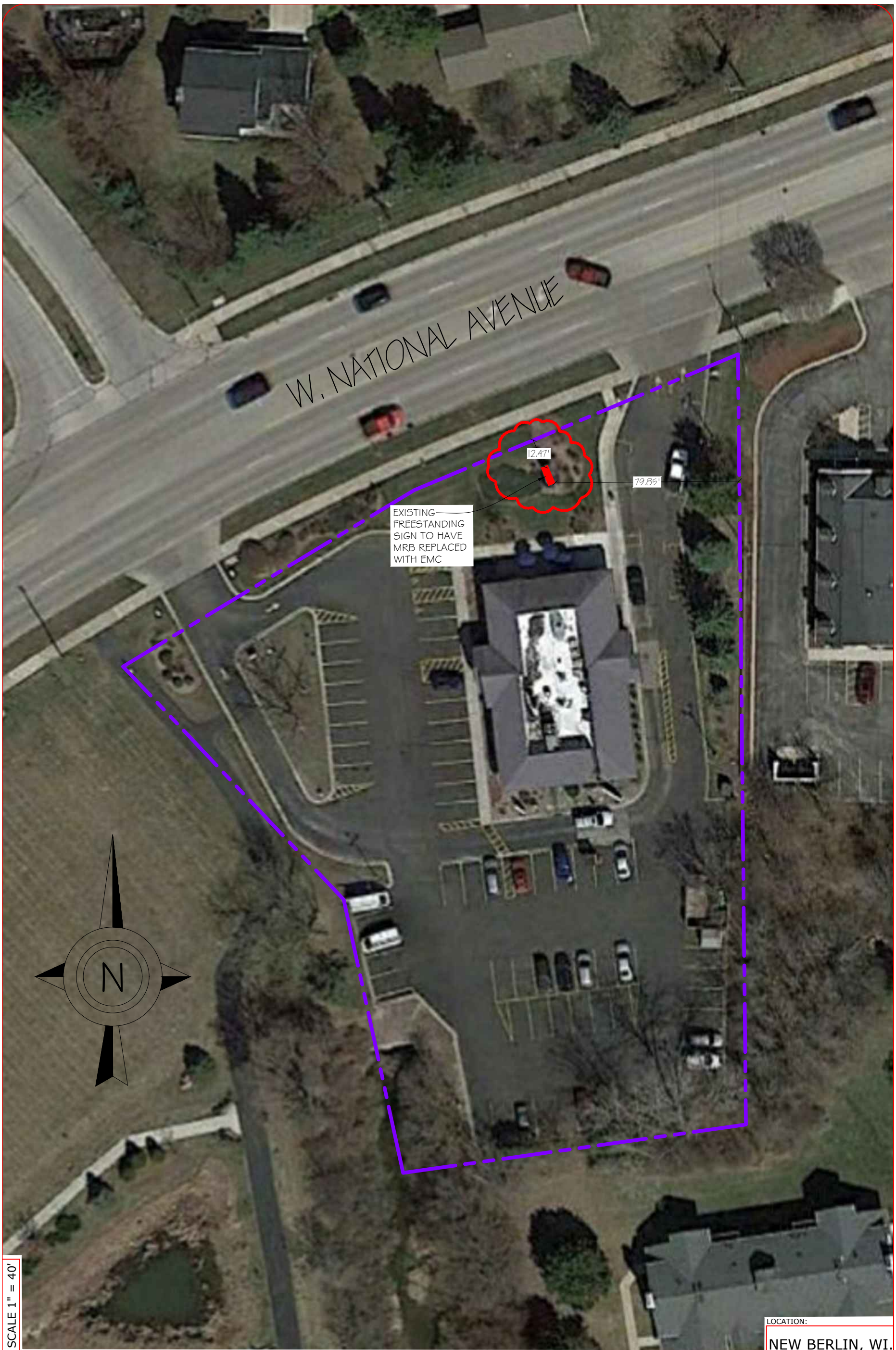

LOCATION:

NEW BERLIN, WI.

Project No.: 31395 Drawn By: CLH Reviewed By: MW Date: 11-22-21 Sheet Number: 1 OF 1	NEW CULVER'S-SIGNAGE 14855 W. NATIONAL AVE. NEW BERLIN, WI. 53151 SIGN PLACEMENT PLAN	Client: Culver Franchising System, Inc. 540 Water Street Prairie du Sac, WI 53578 p (608) 643-7980	SPRINGFIELD SIGN 4825 E. Kearney St. Springfield, MO 65803 (417) 862-2454

STAFF REPORT
EXECUTIVE SUMMARY

APPLICANT/PROJECT:	**Justin Bohler with ReVision Real Estate LLC / Property ReVision**
LOCATION:	**17400 W. National Avenue (Tax Key: 1236-998-002)**
REQUEST:	**12 month extension of the approval of a Conditional Use Permit for Property ReVision to construct a new office and service commercial building, located at 17400 W. National Avenue.**
D.R.C. RECOMMENDATION:	**Approval of a 12 month extension for the approval of a Conditional Use Permit for Property ReVision to construct a new office and service commercial building, located at 17400 W. National Avenue, subject to the application, plans on file and the following conditions of approval: *See Original Staff Report from 2/1/2021.***

***Applicant's letter is attached to this staff report.**

DETAILS IN ATTACHED STAFF REPORT

STAFF REPORT
EXECUTIVE SUMMARY

APPLICANT/PROJECT:	**Justin Bohler with ReVision Real Estate LLC / Property ReVision**
LOCATION:	**17400 W. National Avenue (Tax Key: 1236-998-002)**
REQUEST:	**Conditional Use Permit for Property ReVision to construct a new office and service commercial building, located at 17400 W. National Avenue.**
D.R.C. RECOMMENDATION:	**Approval of the Conditional Use Permit for Property ReVision to construct a new office and service commercial building, located at 17400 W. National Avenue, subject to the application, plans on file and the following conditions of approval:**

1. **Planning:**
   - **a. Architecture Review Committee approval required prior to issuance of the Zoning Permit.**
     - **i. The project was approved by the Architectural Review Committee during the January 11, 2021 meeting.**
   - **b. Plan of operation shall be consistent with submitted plans on file.**
     - **i. Applicant is proposing to construct a new office and service commercial building.**
     - **ii. Employee and customer parking shall be contained on site.**
   - **c. Applicant shall correct all drafting errors and requested changes identified by City Staff.**
   - **d. Approval of the Landscaping Plan and payment of all installation and maintenance sureties is required. Landscape plans shall meet all the requirements of Article VIII Section 275-53 through 275-56 of the City's Zoning Code.**
   - **e. Applicant shall prepare a detailed tree inventory analysis. The applicant will be required to adhere to the City Tree Replacement Schedule listed in Section 275-54.B of the Zoning Code.**
     - **i. The plant schedule shall refer to trees in DBH (diameter breast height).**
     - **ii. The tree replacement schedule requires a minimum plant size of replacement trees to be 2.5" DBH.**
   - **f. Dumpsters shall be properly screened from the street and public view in accordance with Article VIII Section 275-56 of the New Berlin Municipal Ordinance.**
   - **g. All permanent and temporary signs require a Sign Application to be filed prior to installation.**
   - **h. Private water supply wells meeting the requirements of the Wisconsin Department of Natural Resources will also be required.**

i. **The property, which is located outside of the current MMSD Sewer Service District will require private on-site waste treatments sites (POWTS) that will meet Waukesha County requirements. Applicant shall coordinate with Waukesha County and WDNR for sanitary and well permits.**

j. **The applicant shall execute a Hold Harmless Agreement though the City of New Berlin for the holding tank.**

2. **Building Inspection:**

   a. **Building plans shall be stamped by a licensed architect or professional engineer per the Wisconsin Enrolled Commercial Building Code (SPS.361.31).**

   b. **Building plans shall be approved by the State of Wisconsin Department of Commerce Safety and Buildings Division (SPS.361.60).**

   c. **Apply for and obtain appropriate building, electric and plumbing permits from the City of New Berlin Building Inspection Division.**

   d. **The building shall be fully accessible from the parking lot to the interior elements SPS.363.1101 and ICC/ANSI A117.1).**

3. **Fire Department:**

   a. **Maintain sprinkler coverage throughout. Should buildings be used for vehicle storage or repair, buildings shall be fully sprinklered.**

   b. **Key for Knox box is required.**

   c. **Provide fire extinguishers every 75' of travel.**

   d. **Maintain egress/emergency lighting throughout.**

   e. **Maintain 24' fire access width for fire lane.**

   f. **Name and address on front and rear where applicable.**

4. **Stormwater Utility:**

   a. **Plans indicate the area of disturbance is 0.90 acres and the increased impervious is 18,399 square feet.**

   b. **The applicant has submitted a stormwater summary utilizing rain gardens to comply with the MMSD Green Infrastructure requirements. MMSD has issued approval.**

   c. **Stormwater Maintenance Agreement is required to be submitted and once approved, recorded at the County. Boilerplate is available online.**

   d. **Asbuilts of the stormwater features will be required prior to occupancy.**

   e. **Ditching and driveway culvert shall be shown along National Avenue.**

5. **Engineering:**

   a. **Obtain an access permit from Waukesha County.**

<u>DETAILS IN ATTACHED STAFF REPORT</u>

CITY OF NEW BERLIN
DEPARTMENT OF COMMUNITY DEVELOPMENT
PLAN COMMISSION STAFF REPORT

Meeting of February 1, 2021

Justin Bohler with ReVision Real Estate LLC / Property ReVision
17400 W. National Avenue

DATE STAFF REPORT: Revised 1/12/2021

APPLICANT / OWNER(S): Justin Bohler with ReVision Real Estate / ReVision Real Estate LLC

REQUEST / DESCRIPTION OF PROJECT: Conditional Use Permit for Property ReVision to construct a new office and service commercial building located at 17400 W. National Avenue.

DATE OF APPLICATION / DATE FILED WITH CITY CLERK: 7/17/2020

DATE OF COMPLETENESS DETERMINATION: 7/20/2020; Revised Parking Plan 11/5/2020; Revised Plans 1/7/2021
Application Check List Enclosed: N

PRE-APPLICATION CONFERENCE HELD: Yes
Dates of Meetings: 4/6/2020 and numerous emails / phone calls.
Site Visit: 8/17/2020

CONCEPTUAL PLAN: N/A

SIZE OF DEVELOPMENT / PARCEL(S):
Parcel Size: 3.75 Acres
Development Size: 6,000 Sq. Ft.

CURRENT ZONING: O-1 (Office and Business Service District) & R-3 (Suburban Single-Family Residential)

CURRENT LAND USE: Vacant

PROPOSED ZONING: N/A

PROPOSED LAND USE: Office and service commercial

PROPOSED LOT SIZE (S): N/A

PROPOSED DENSITY: N/A

ADJACENT ZONING AND LAND USE:

North:	Zoning: I-1	Land Use: Institutional (Ronald Reagan Elementary)
South:	Zoning: A-2	Land Use: Agricultural (Farm)
East:	Zoning: B-2	Land Use: Commercial (Cleaners)
West:	Zoning: B-2 / R-1/R-2	Land Use: Commercial / Single-Family Residential (Vacant)

CONFORMANCE WITH COMPREHENSIVE PLAN AND MUNICIPAL CODE: Yes

> **Chapter 19: Neighborhood "I": National Avenue West:** Yes, this submittal meets the intent of this Chapter.

Planning Context / Vision / Development Policies:

Vision:

- *The National Avenue West area, like the Western Area neighborhood (Neighborhood B), should be a regional model of rural development.*

Development Policies:

- *Develop the area immediately west of Calhoun Road as a gateway into rural western New Berlin. Permit the development of this area for a mix of commercial and residential uses, but require that commercial use to be oriented to a rural theme.*

Land use:

- Future Land Use Map: Rural Commercial / Country Residential

The Rural Commercial Design Guide

- *The Rural Commercial Design Guide, adopted by the City in 2001, serves as a contributor to economic development conditions in Neighborhood B. The Guide provides design standards for areas west of Calhoun Road with the southern border at IH-43/College Avenue and the northern border at Cleveland Avenue (Figure 12.12-1). The boundaries are further defined as both sides of Cleveland Avenue and Calhoun Road with the exception of the properties located within the New Berlin Industrial Park SPO and the B-2 and O-2 zoned parcels near the intersection of Cleveland Avenue and Calhoun Road (Tax Keys: 1188-994, 1188-999, 1188-992001, 1188-993 and 1188-020). The West Lincoln Avenue corridor is not included. The intent of the Design Guide is to retain and encourage small business and office developments, provide safe and convenient pedestrian access, and ensure quality visual appearances. The Rural Commercial Design Area also includes land within Neighborhood I (National Avenue & West Neighborhood) and a small portion of Neighborhood J (I-43 & Racine Quarries).*
- *The design standards affecting recommendations for economic development in Neighborhood B include provisions for cross access between neighboring parcels where feasible, and the requirement that new buildings correspond proportionally and stylistically to existing buildings in rural commercial areas.*
- Details of the Rural Commercial Design Standards are below:
    - *Building designs shall utilize materials that reflect a rural character. Cedar or clapboard siding, stone and brickwork, or other comparable materials that achieve the same quality in appearance are acceptable. Aluminum and vinyl siding shall be prohibited. New buildings shall correspond in height, width, proportion, relationship to street, roof forms, composition, rhythm, proportion of openings, materials and color to the other buildings in the district.*

    - Brick (Ronald Reagan Elementary School – 4225 S. Calhoun Rd).

- Vinyl (Apple Ridge Academy – 17612 W. National Ave.)

- Metal panel and brick (Works Plumbing – 17650 W. National Ave.)

- Metal panel and brick (Demski Electric – 17770 W. National Ave.)

- Corrugated metal and painted cedar (New Berlin Auction & Sales Barn – 17650 W. National Ave.)

- *Four sided architecture that utilizes similar building materials and design for all sides of a proposed structure is required.*

- *Mansards, pents (lean-to), gambrels or other roof shapes not characteristic of the architectural area shall not be allowed. Rolled roofing, tar and gravel and other similar roofing materials are prohibited except that such materials may be used on flat or slightly sloped roofs which are not visible from the ground.*
- *Earth tones such as grays, browns, greens, and tans are encouraged.*
- *To the maximum extent practicable, parking areas shall be located to the side or behind buildings. The perimeter of the parking lot shall provide for a lawn area in which trees and shrubs will be planted so as to allow ample snow storage capacity yet avoid damage to plantings from same.*
    - *<u>Per the Plan Commission discussion on August 31st, the applicant explored options to move parking behind the front building. Their findings can be found in the "parking exhibit" attached.</u>*
- *Existing tree lines should be preserved. If removal of existing tree lines is required due to its undesirable nature, new planting that results in no less of a screening effect shall be required when adjacent to residential uses.*
- *Signage shall be designed in unity with the building design through the use of the same or similar materials and colors. Ground, monument signs, or wall mounted signs made of wood, hanging from a wooden or wrought iron mount are acceptable. Signs that suit the architectural features of the building are acceptable. Neon tubed exterior accent light, external neon tubed signs and internally illuminated signs are not permitted.*
- *Lighting shall be down cast, zero degree tilt, cutoff fixtures not exceeding 25 feet in height (including the light pole base and/or pedestal). Lighting shall be positioned so as not to cause glare on adjacent properties and streets. At a minimum, site lighting marking the entrance to businesses shall match or complement that which may be chosen by the City as standard decorative street lighting. Site lighting shall meet the requirements of § 275-60I in its entirety.*
- *Cross Access to and between neighboring properties shall be implemented wherever possible. The goal in this requirement is to remove as much incidental site to site traffic thus reducing the possibility of traffic conflicts and accidents. Cross access drives may be either the interconnection of parking lots or the construction of a separate drive.*

Figure 12.12-1. Rural Commercial Design Area

ZONING CODE (CHAPTER 275): Yes, this request is consistent with the current zoning district outlined is Section 275-35B(1) of the Zoning Code. Note, there is R-3 zoning on the northern portion of this parcel, however, the applicant will not be developing within this area.

DEVELOPMENT CODE (CHAPTER 235): N/A

PUBLIC HEARING REQUIRED: Yes, required for a Conditional Use. The Public Hearing was held on August 31, 2020.

CONDITIONAL USE REQUIRED: Yes

USE / SITE /ARCHITECTURAL REVIEW:
Conditional Use Approval Required: Yes
Site Plan Required: Yes
Architectural Review Required: Yes, ARC approved on 1/11/2021.

PROPOSED ARCHITECTURE: The applicant is looking to construct a new building to be used for office area and service commercial space. The building materials include LP siding and stone. The ARC approved the architecture at the January 11, 2021 meeting.

UNIQUE SITE CHARACTERISTICS:
Environmental Corridor: No
Wetlands on Property: Yes, the wetlands have been delineated and are registered on the City's Zoning Map.
Conservancy Districts (C-1, C-2): No
NRCS Map Classification: Not Inventoried.
Floodplain: No
Topography / Geologic: Site is relatively flat.

ALTERNATIVE TRANSPORTATION PLAN: No improvements identified.

PARK & OPEN SPACE PLAN: No improvements identified.

NATURAL RESOURCES PROTECTION:
Limits of Disturbance (LOD): Shown on plans.
Woodland, Tree, and Vegetation Protection: N/A
Wildlife Habitat Protection: N/A
Wildlife Management Plan: N/A

ENVIRONMENTAL IMPACT: No impact. Wetlands have been delineated and registered with the City.

STORM WATER MANAGEMENT / DRAINAGE PLAN: Applicant is required to adhere to all City of New Berlin codes, ordinances and plans regarding storm water conveyance and maintenance and/or as identified by the Department of Community Development.

SANITARY SEWER PROVISION:
Within Current Sewer Service Area: No
Sewershed Capacity Available: N/A
Adequate Linkage: N/A
Onsite System Required: Yes

WATER USAGE CALCULATION: 800 GPD per new connection.

TRAFFIC IMPACT: The ITE Trip Generation estimates 35 average trips based on single tenant office use. However, the applicant anticipates a total of 3-5 vehicles to access the building, per day.

SCHOOL DISTRICT IMPACT: No impact.

PREVIOUS ACTION:

9/18/1978	Plan Commission approved a use approval application to construct an underground sprinkler business (National Irrigation Supply Company).
10/1/1984	Plan Commission denied a use approval application for Home and Garden.
7/2/1990	Plan Commission denied a use approval application for a building to store construction equipment.
6/19/1995	Plan Commission tabled a request to rezone the property from R-3 to B-2 (Thiessenhusen Plumbing).
4/2/2000	Plan Commission denied a use approval application for a 40' x 90' building for home nursing and aide services (Sunrise Home Health Care).
11/5/2001	Plan Commission denied a rezoning request from O-1 to B-2 (Sports and Fitness Traders).
2/27/2017	Wetland registration submitted to the City.
8/31/2020	Plan Commission held a public hearing for the proposed conditional use.
10/5/2020	Plan Commission tabled the applicant's request.
1/11/2021	Architecture Review Committee approved the architecture for Property ReVision.

CONSISTENCY WITH PREVIOUS ACTION: Yes

FINDINGS:

1. Architecture Review Committee approval required prior to issuance of the Zoning Permit. ARC approved the project on 1/11/2021.
2. Plan of operation shall be consistent with submitted plans on file.
   i. The applicant is proposing to construct a new office / service commercial building.
   ii. Employee and customer parking shall be contained on site.
3. Private water supply wells meeting the requirements of the Wisconsin Department of Natural Resources will also be required.
4. The property, which is located outside of the current MMSD Sewer Service District will require private on-site waste treatments sites (POWTS) that will meet Waukesha County requirements. Applicant shall coordinate with Waukesha County and WDNR for sanitary and well permits.
5. The applicant shall execute a Hold Harmless Agreement though the City of New Berlin for the holding tank.
6. The property has two zoning districts – O-1 (Office and Business Service District) and R-3 (Suburban Single-Family Residential District). Should the property be divided in the future, all O-1 and R-3 requirements would need to be met.
7. Per Section 275-27C. Approval criteria: *"The Plan Commission of the City of New Berlin will grant approval of conditional use permits only if it finds that the proposed use complies with all relevant regulations set forth in this chapter, including, but not limited to, § 275-41, Use-specific regulations, and Article VIII, General Development Regulations. Per § 66.1001(2m)(b), Wis. Stats., a conditional use does not need to be consistent with the City's Comprehensive Plan."*
   (1) Approval of a conditional use. Recommendations and decisions on conditional uses should be based on consideration of the following criteria:
   (a) Whether the proposed use corrects an error or meets the challenge of some changing condition, trend, or fact;
   (b) Whether the proposed use is consistent with the health, safety, or general welfare of the general public;
   (c) Whether the proposed use will protect the natural environment, including, but

not limited to air, water, stormwater management, wildlife, and vegetation.

(2) Changes to the use. In acting on a conditional use, the Plan Commission/CDA shall consider the stated purpose of the proposed use and shall approve the petition only if it finds that the applicant has provided substantial evidence as that term is defined in Wis. Stats. § 62.23(7) that the use will meet the following criteria for approval:

(a) Adequate public facilities and services (including sewage and waste disposal, water, gas, electricity, schools, police and fire protection, and roads and transportation, as applicable) will be available to serve the subject property while maintaining adequate levels of service to existing development;
Yes, the proposed request is compliant.

(b) Provision of public facilities to accommodate development will not place an unreasonable burden on the ability of the City to provide them;
Yes, the proposed request is compliant.

(c) The proposed development has taken into account impacts on surrounding properties or the natural environment, including traffic, air, water, noise, stormwater management, soils, wildlife, and vegetation;
Yes, the proposed request is compliant.

(d) The land is suitable for development and will not cause unreasonable soil erosion or have an unreasonable adverse effect on rare or irreplaceable natural areas; and
Yes, the proposed request is compliant. The wetlands have been delineated and registered with the City.

(e) The proposed use will not be used to legitimize a nonconforming use or structure
Yes, the proposed request is compliant. The application is consistent with adjacent uses. See example photos in this report (pages 4 and 5).

D.R.C RECOMMENDATION: Approval of the Conditional Use Permit for Property ReVision to construct a new office and service commercial building, located at 17400 W. National Avenue, subject to the application, plans on file and the following conditions of approval: **SEE EXECUTIVE SUMMARY.**

ATTACHMENTS:
Location Map
Plan of Operation
Plans
Parking Exhibit

City of New Berlin
Community Development

CU-2001518
Property ReVision Office
17400 W. National Avenue

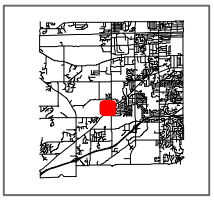

City of New Berlin
Department of Community Development
3805 S Casper Dr.
New Berlin WI 53151
(262) 797-2445
www.newberlin.org

Legend

- Parcels
- Road Right-of-Way
- Floodplain (FEMA DFIRM 2014)
- Zoning Boundaries

Wetland Registration

- Registered Wetland
- Outside Wetland

Environmental Corridor

- Isolated Natural Resource Area
- Primary Environmental Corridor
- Secondary Environmental Corridor

Sewer Service Area (MMSD)

- Current
- Ultimate

N

0 90 180 Feet

The information and depictions herein have been produced using data available through photogrametric means by the City of New Berlin. The informations and depictions herein are for informational purposes and the City of New Berlin specifically disclaims accuracy in this reproduction and specifically admonishes and advises that any and all depiction, measurements, distances depicted herein and as to which specific or precise accuracy is required should be determined by procurement of certified maps, surveys, plats, Flood Insurance Studies, or other official means.

Map Printed: 7/31/2020 8:43:48 AM

17400 W. National Ave
New Berlin, WI

Property ReVision LLC

Plan of Operation

The existing lot has been vacant and unutilized for 30+ years. The total lot area is 3.74 acres with the rear being zoned residential and the front zoned O-1 Commercial. Our plan is to develop a portion of the commercially zoned area of the property to include 2 separate office / service commercial buildings. The relatively long and narrow lot will allow for one building behind the other with double drive lanes along the side of the front building while maintaining all setback requirements for the buildings and pavement areas.

The intended us for both buildings is 50% office space and 50% "service commercial space" to service company equipment. The buildings will be divided down the center in the longer direction with the overhead garage doors leading to the service space and the entry door accessing the office areas. One building will be utilized by Property ReVision LLC and the other will be leased or sold.

A soil scientist analyzed the soils for the site and recommended that a holding tank be utilized on the site rather than a septic system. His report was filed with Waukesha county. There is an existing well on site that appears to have serviced the old building. The existing well will be utilized if it is in working condition, otherwise a new well will be drilled to serve both buildings. WE Energies will supply power.

Soil borings have also been taken on the site and the soil engineering determined that either a post frame style building or stick framed building on a spread footing would be acceptable. Our preference is to construct post frame style buildings with galvanized steel panel siding but are considering other siding materials as well.

The area being impacted by the proposed development is less than 1.0 acres.

17400 WEST NATIONAL AVENUE

CITY OF NEW BERLIN
WAUKESHA COUNTY, WISCONSIN

LOCATION MAP

PART OF SOUTHEAST 1/4 AND SOUTHWEST 1/4
SECTION 21, TOWNSHIP 6 NORTH, RANGE 20 EAST
(N.T.S.)

PROJECT LOCATION:

CITY OF NEW BERLIN
WAUKESHA COUNTY, WI

ALL SITE IMPROVEMENTS AND CONSTRUCTION SHOWN ON THE PLANS SHALL CONFORM TO THE CITY OF NEW BERLIN DEVELOPER'S HANDBOOK. WHERE THE PLANS DO NOT COMPLY, IT SHALL BE THE SOLE RESPONSIBILITY AND EXPENSE OF THE DEVELOPER TO MAKE REVISIONS TO THE PLANS AND/OR CONSTRUCTED INFRASTRUCTURE TO COMPLY

SHEET INDEX

SHEET NO.	SHEET TITLE
T0.0	COVER SHEET
C0.0	EXISTING CONDITIONS MAP
C1.0	DEMOLITION PLAN
C2.0	SITE PLAN
C3.0	GRADING & EROSION CONTROL PLAN
C4.0	DETAILS
L1.0	LANDSCAPE PLAN
L2.0	LANDSCAPE DETAILS & NOTES

DIGGERS HOTLINE
Toll Free (800) 242-8511

JSD Professional Services, Inc.
Engineers • Surveyors • Planners

CREATE THE VISION TELL THE STORY

MADISON | MILWAUKEE | WAUSAU
APPLETON | KENOSHA | CHICAGO
COEUR D'ALENE

MILWAUKEE REGIONAL OFFICE
W238 N1610 BUSSE ROAD, SUITE 100
WAUKESHA, WISCONSIN 53188
P. 262.513.0666

CLIENT:

PROPERTY REVISION
REALTY / CONSTRUCTION / DESIGN

CLIENT ADDRESS:
3049 WEST BRIDGE STREET
GREENFIELD, WI 53221

PROJECT:
17400 WEST NATIONAL AVENUE

PROJECT LOCATION:
17400 WEST NATIONAL AVENUE
NEW BERLIN, WI 53146

WISCONSIN JARED J. SIMON E-42134 WAUKESHA, WI PROFESSIONAL ENGINEER
12-24-2020

PLAN MODIFICATIONS:

#	Date:	Description:
1	7/17/2020	INITIAL CITY SUBMITTAL
2	11/30/2020	REVISED CITY SUBMITTAL
3	12/24/2020	REVISED CITY SUBMITTAL
4		
5		
6		
7		
8		
9		
10		
11		
12		
13		
14		
15		

Design/Drawn:	APM
Approved:	TJB
Date:	7/17/2020

SHEET TITLE:
COVER SHEET

SHEET NUMBER:
T0.0

JSD PROJECT NO: 20-9753

THESE PLANS AND DESIGNS ARE COPYRIGHT PROTECTED AND MAY NOT BE USED IN WHOLE OR IN PART WITHOUT THE WRITTEN CONSENT OF JSD PROFESSIONAL SERVICES, INC.

File: R:\2020\20\9753\DWG\Civil Sheets\20-9753 T0.0 - Cover Sheet.dwg Layout: T0.0 User: jsimon Plotted: Dec 30, 2020 - 11:05am Xref's:

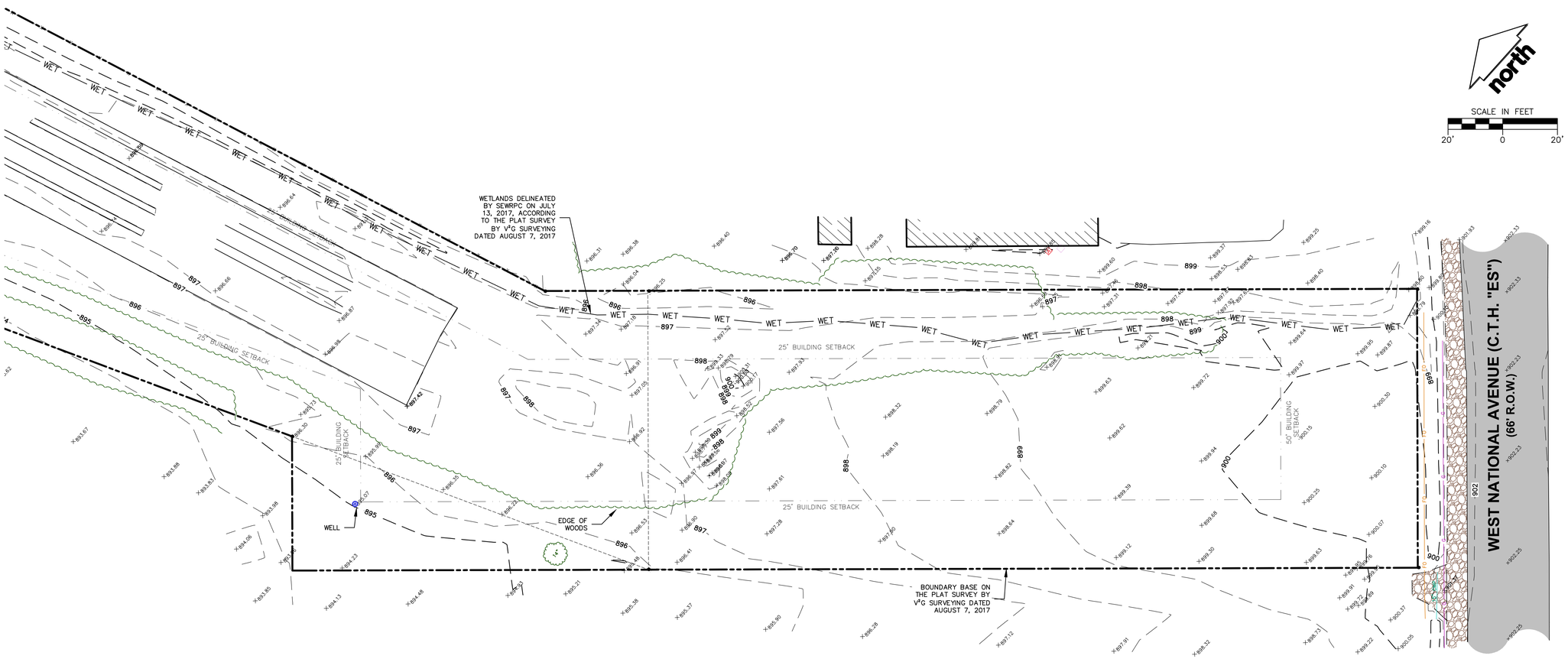

LEGEND

- IRON PIPE FOUND (SIZE NOTED)
- CONTROL POINT
- BENCHMARK
- WELL
- GAS REGULATOR/METER
- AIR CONDITION UNIT
- DECIDUOUS TREE
- CONIFEROUS TREE
- RIGHT-OF-WAY LINE
- SETBACK LINE
- SECTION LINE
- PROPERTY LINE
- EASEMENT LINE
- FENCE LINE
- EDGE OF GRAVEL
- STORM SEWER
- NATURAL GAS
- FIBER OPTIC
- EDGE OF WOODS OR BRUSH
- BUILDING
- 875 INDEX CONTOUR
- 874 INTERMEDIATE CONTOUR
- WET DELINEATED WETLANDS
- 874.29 SPOT ELEVATION
- BITUMINOUS PAVEMENT
- GRAVEL
- EDGE OF BITUMINOUS
- END OF FLAGGED UTILITIES

EXISTING CONDITIONS

BEING CERTIFIED SURVEY MAP NO. 313 RECORDED AUGUST 30, 1965 IN VOLUME 2 OF CERTIFIED SURVEY MAPS ON PAGE 151, AS DOCUMENT NO. 644218, ALSO A PART OF THE NORTHEAST 1/4 OF THE SOUTHEAST 1/4 OF SECTION 21, TOWNSHIP 6 NORTH, RANGE 20 EAST, IN THE CITY OF NEW BERLIN, WAUKESHA COUNTY, WISCONSIN

NOTES

1. THE TOPOGRAPHICAL FIELD WORK WAS PERFORMED BY JSD PROFESSIONAL SERVICES, INC. ON MAY 28, 2020, NO BOUNDARY SURVEY WAS PERFORMED.
2. PROPERTY LINES SHOWN ARE REFERENCED ONLY AND WERE PROVIDED BY THE CLIENT.
3. ELEVATIONS ARE BASED ON THE NATIONAL GEODETIC VERTICAL DATUM OF 1929 (NGVD29). BENCHMARK IS A BRASS CAP IN CONCRETE MARKING THE EAST 1/4 CORNER OF SECTION 21, T6N, R20E, ELEVATION = 971.791
4. CONTOUR INTERVAL IS ONE FOOT.
5. SPOT ELEVATIONS IN CURBED AREAS REFERENCE THE PAVEMENT EDGE ELEVATIONS.
6. SUBSURFACE UTILITIES AND FEATURES SHOWN ON THIS MAP HAVE BEEN APPROXIMATED BY LOCATING SURFICIAL FEATURES AND APPURTENANCES, LOCATING DIGGERS HOTLINE FIELD MARKINGS AND BY REFERENCE TO UTILITY RECORDS AND MAPS. DIGGER'S HOTLINE TICKET NO. 20202120592 & 20202120611, WITH A CLEAR DATE OF MAY 27, 2020.
7. UTILITY COMPANIES CONTACTED THRU DIGGERS HOTLINE:
   AT&T DISTRIBUTION
   WE ENERGIES
   CITY OF NEW BERLIN IT & UTILITIES
8. BEFORE EXCAVATION, APPROPRIATE UTILITY COMPANIES SHOULD BE CONTACTED. FOR EXACT LOCATION OF UNDERGROUND UTILITIES, CONTACT DIGGERS HOTLINE, AT 1.800.242.8511.
9. THE ACCURACY OF THE BENCHMARKS SHOWN ON THIS MAP SHALL BE VERIFIED BEFORE BEING UTILIZED. JSD PROFESSIONAL SERVICES, INC. DOES NOT WARRANT THE ACCURACY OF THESE BENCHMARKS.
10. THIS PARCEL IS ZONED O-1 OFFICE AND BUSINESS SERVICE DISTRICT ZONE PER THE CITY OF NEW BERLIN PUBLIC ZONING WEB MAP.
11. THIS PARCEL IS SUBJECT TO ALL EASEMENTS AND AGREEMENTS, BOTH RECORDED AND UNRECORDED.

DIGGERS HOTLINE
Toll Free (800) 242-8511

JSD Professional Services, Inc.
Engineers • Surveyors • Planners
CREATE THE VISION TELL THE STORY
MADISON | MILWAUKEE | WAUSAU
APPLETON | KENOSHA | CHICAGO
COEUR D'ALENE
MILWAUKEE REGIONAL OFFICE
W238 N1610 BUSSE ROAD, SUITE 100
WAUKESHA, WISCONSIN 53188
P. 262.513.0666

CLIENT:
PROPERTY REVISION REALTY / CONSTRUCTION / DESIGN

CLIENT ADDRESS:
3049 WEST BRIDGE STREET
GREENFIELD, WI 53221

PROJECT:
17400 WEST NATIONAL AVENUE

PROJECT LOCATION:
17400 WEST NATIONAL AVENUE
NEW BERLIN, WI 53146

PLAN MODIFICATIONS:

#	Date:	Description:
1	7/17/2020	INITIAL CITY SUBMITTAL
2	11/30/2020	REVISED CITY SUBMITTAL
3	12/24/2020	REVISED CITY SUBMITTAL
4		
5		
6		
7		
8		
9		
10		
11		
12		
13		
14		
15		

Design/Drawn: APM
Approved: TJB
Date: 7/17/2020

SHEET TITLE:
EXISTING CONDITIONS MAP

SHEET NUMBER:
C0.0

JSD PROJECT NO: 20-9753

THESE PLANS AND DESIGNS ARE COPYRIGHT PROTECTED AND MAY NOT BE USED IN WHOLE OR IN PART WITHOUT THE WRITTEN CONSENT OF JSD PROFESSIONAL SERVICES, INC.

File: R:\2020\20\9753\DWG\Civil\Sheets\20-9753 C0.0 - Existing Conditions Map.dwg Layout: C0.0 User: jaimon Plotted: Dec 30, 2020 - 11:06am Xrefs:

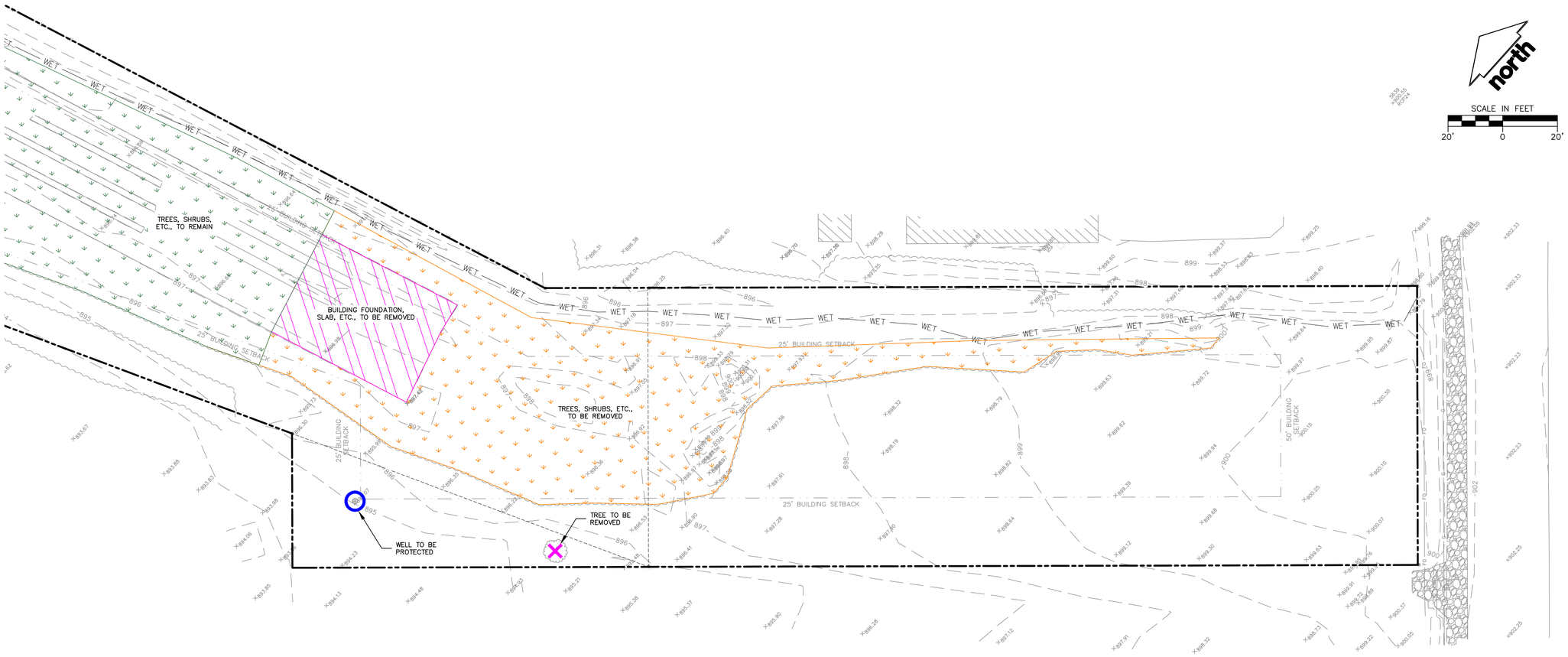

LEGEND

- PROPERTY LINE
- BUILDING OUTLINE
- FEATURE TO BE DEMOLISHED
- BUILDING FOUNDATION TO BE DEMOLISHED
- TREES, SHRUBS, ETC. TO BE REMOVED
- TREES, SHRUBS, ETC TO REMAIN
- FEATURE TO BE DEMOLISHED
- FEATURE TO BE PROTECTED

DEMOLITION NOTES

1. THE CONTRACTOR IS RESPONSIBLE FOR DEMOLITION, REMOVAL, AND DISPOSAL (IN A LOCATION APPROVED BY ALL GOVERNING AUTHORITIES) OF ALL STRUCTURES, PADS, WALLS, FLUMES, FOUNDATIONS, PARKING, DRIVES, DRAINAGE STRUCTURES, UTILITIES, ETC., IN A LAWFUL MANNER, SUCH THAT THE IMPROVEMENTS SHOWN ON THE REMAINING PLANS CAN BE CONSTRUCTED. ALL FACILITIES TO BE REMOVED SHALL BE UNDERCUT TO SUITABLE MATERIAL AND BROUGHT TO GRADE WITH SUITABLE COMPACTED FILL MATERIAL PER THE SPECIFICATIONS. THE CONTRACTOR IS RESPONSIBLE FOR OBTAINING ALL PERMITS REQUIRED FOR DEMOLITION AND DISPOSAL.

2. THE CONTRACTOR SHALL COORDINATE WITH RESPECTIVE UTILITY COMPANIES PRIOR TO THE REMOVAL AND/OR RELOCATION OF UTILITIES. THE CONTRACTOR SHALL COORDINATE WITH THE UTILITY COMPANY CONCERNING PORTIONS OF WORK WHICH MAY BE PERFORMED BY THE UTILITY COMPANY'S FORCES AND ANY FEES WHICH ARE TO BE PAID TO THE UTILITY COMPANY FOR THEIR SERVICES. THE CONTRACTOR IS RESPONSIBLE FOR PAYING FOR ALL FEES AND CHARGES. COORDINATION REQUIRED PRIOR TO CONSTRUCTION.

3. THIS PLAN INDICATES ITEMS ON THE PROPERTY INTENDED FOR DEMOLITION BASED ON THE CURRENT SITE DESIGN THAT HAVE BEEN IDENTIFIED BY A REASONABLE OBSERVATION OF THE EXISTING CONDITIONS THROUGH FIELD SURVEY RECONNAISSANCE, "DIGGER'S HOTLINE" LOCATION, AND GENERAL "STANDARD OF CARE". THERE MAY BE ADDITIONAL ITEMS THAT CAN NOT BE IDENTIFIED BY A REASONABLE ABOVE GROUND OBSERVATION, OF WHICH THE ENGINEER WOULD HAVE NO KNOWLEDGE OR MAY BE A PART OF ANOTHER DESIGN DISCIPLINE. IT IS THE CONTRACTOR'S/BIDDER'S RESPONSIBILITY TO REVIEW THE PLANS, INSPECT THE SITE AND PROVIDE THEIR OWN DUE DILIGENCE TO INCLUDE IN THEIR BID WHAT ADDITIONAL ITEMS, IN THEIR OPINION, MAY BE NECESSARY FOR DEMOLITION. ANY ADDITIONAL ITEMS IDENTIFIED BY THE CONTRACTOR/BIDDER SHALL BE IDENTIFIED IN THE BID AND REPORTED TO THE ENGINEER OF RECORD. JSD PROFESSIONAL SERVICES, INC. (JSD) TAKES NO RESPONSIBILITY FOR ITEMS ON THE PROPERTY THAT COULD NOT BE LOCATED BY A REASONABLE OBSERVATION OF THE PROPERTY OR OF WHICH THEY WOULD HAVE NO KNOWLEDGE.

4. ALL PERIMETER EROSION CONTROL DEVICES SHALL BE INSTALLED PRIOR TO THE START OF DEMOLITION ACTIVITIES. CONTRACTOR SHALL KEEP ALL STREETS, PRIVATE DRIVES AND PAVEMENT FREE AND CLEAR OF ALL CONSTRUCTION RELATED DIRT, DUST AND DEBRIS.

5. ALL TREES WITHIN THE CONSTRUCTION LIMITS SHALL BE REMOVED UNLESS SPECIFICALLY CALLED OUT FOR PROTECTION. ALL TREES TO BE REMOVED SHALL BE REMOVED IN THEIR ENTIRETY AND STUMPS SHALL BE GROUND TO PROPOSED SUBGRADE.

6. PERFORM TREE PRUNING IN ALL LOCATIONS WHERE PROPOSED PAVEMENT AND/OR UTILITY INSTALLATION ENCROACH WITHIN THE EXISTING DRIP LINE OF THE TREES TO REMAIN. ALL TRENCHING WITHIN THE EXISTING DRIP LINE OF THE TREES TO REMAIN SHALL BE DONE RADIALLY AWAY FROM THE TRUNK IF ROOTS IN EXCESS OF 1" DIAMETER ARE EXPOSED. ROOTS MUST BE CUT BY REPUTABLE TREE PRUNING SERVICE PRIOR TO ANY TRANSVERSE TRENCHING.

7. ABANDONED/REMOVED ITEMS SHALL BE DISPOSED OF OFF SITE UNLESS OTHERWISE NOTED.

8. VOIDS LEFT BY ANY ITEM REMOVED UNDER ANY PROPOSED PAVEMENT, WALK, ETC. OR WITHIN 24" THEREOF SHALL BE FILLED AND BACKFILLED WITH GRANULAR MATERIALS AND COMPACTED PER SPECIFICATIONS.

9. PRIOR TO CONSTRUCTION, THE CONTRACTOR IS RESPONSIBLE FOR:
   - 9.1. EXAMINING ALL SITE CONDITIONS RELATIVE TO THE CONDITIONS INDICATED ON THE ENGINEERING DRAWINGS. ANY DISCREPANCIES ARE TO BE REPORTED IMMEDIATELY TO JSD AND RESOLVED PRIOR TO THE START OF CONSTRUCTION.
   - 9.2. NOTIFYING ALL UTILITIES PRIOR TO THE REMOVAL OF ANY UNDERGROUND UTILITIES.
   - 9.3. NOTIFYING JSD AND LOCAL CONTROLLING MUNICIPALITY 48 HOURS PRIOR TO THE START OF CONSTRUCTION TO ARRANGE FOR APPROPRIATE CONSTRUCTION INSPECTION.
   - 9.4. PERFORMING UTILITY LOCATE OBSERVATIONS (ULO) ON ALL UTILITY CROSSINGS. CONTRACTOR TO REPORT ANY PLAN DISCREPANCIES OR CONFLICTS PRIOR TO THE START OF UTILITY CONSTRUCTION. CONTRACTOR SHALL BE RESPONSIBLE FOR COORDINATION WITH THE APPROPRIATE UTILITY COMPANIES TO CONDUCT ULO'S.

10. ALL EXISTING UTILITIES TO BE FIELD LOCATED AND FLAGGED BY CONTRACTOR.

11. ANY UTILITIES WHICH ARE TO REMAIN THAT ARE DAMAGED BY THE CONTRACTOR, SHALL BE REPAIRED TO THE OWNER'S SATISFACTION AT THE CONTRACTOR'S EXPENSE.

12. CONTRACTOR SHALL NOTIFY JSD OF ANY ROOF LEADERS AND/OR STORM DRAIN LINES ENCOUNTERED DURING DEMOLITION WHICH ARE NOT SHOWN ON THE PLANS PRIOR TO ABANDONMENT OR REMOVAL.

13. CONTRACTOR IS RESPONSIBLE FOR SITE SAFETY DURING THE CONSTRUCTION OF THESE IMPROVEMENTS.

14. ALL DEMOLITION SHALL BE IN ACCORDANCE WITH THE APPROVED MUNICIPALITY RECYCLING PLAN.

15. ANY CONTAMINATED SOILS SHALL BE REMOVED IN ACCORDANCE WITH FEDERAL AND STATE REGULATIONS TO AN APPROVED LANDFILL.

16. EXISTING FIBER OPTIC LINE(S) TO BE CLEARLY MARKED PRIOR TO ANY EXCAVATION. CONTRACTOR TO NOTIFY THE DESIGN ENGINEER IMMEDIATELY IF ANY DISCREPANCIES OCCUR IN THE LOCATION SHOWN OR PROPOSED IMPROVEMENTS IMPACTING EXISTING FIBER OPTIC LINE(S) LOCATION(S).

17. SEWER ABANDONMENT SHALL BE IN ACCORDANCE WITH SECTION 3.2.24, OF THE STANDARD SPECIFICATIONS FOR WATER AND SEWER CONSTRUCTION IN WISCONSIN, LATEST ADDITION, AND CITY OF RACINE SPECIFICATIONS.

18. WATER ABANDONMENT SHALL BE IN ACCORDANCE WITH SECTION 4.14.0 OF THE STANDARD SPECIFICATIONS FOR WATER AND SEWER CONSTRUCTION IN WISCONSIN, LATEST ADDITION, AND CITY OF RACINE SPECIFICATIONS.

19. BUILDING REMOVALS SHALL BE BY A QUALIFIED CONTRACTOR. CONTRACTOR TO FOLLOW ALL DEMOLITION REGULATIONS, DISCONNECT ALL UTILITIES, OBTAIN ALL APPLICABLE PERMITS AND DISPOSE OF ALL BUILDING MATERIALS IN APPROPRIATE LANDFILLS. DEMOLISHED MATERIALS SHALL NOT BE BURIED ON SITE. IF ENCOUNTERED, ANY CONTAMINATED BUILDING MATERIAL AND/OR SOILS SHALL BE REMOVED AND DISPOSED OF OFF-SITE BY THE CONTRACTOR IN ACCORDANCE WITH APPROPRIATE STATE AND FEDERAL REGULATIONS.

20. RESTORATION OF THE EXISTING ROADWAY RIGHT-OF-WAYS ARE CONSIDERED INCIDENTAL AND SHOULD BE PART OF THE COST OF THE UNDERGROUND IMPROVEMENTS, DEMOLITION AND REMOVAL.

DIGGERS HOTLINE
Toll Free (800) 242-8511

JSD Professional Services, Inc.
Engineers • Surveyors • Planners

CREATE THE VISION TELL THE STORY

MADISON | MILWAUKEE | WAUSAU
APPLETON | KENOSHA | CHICAGO
COEUR D'ALENE

MILWAUKEE REGIONAL OFFICE
W238 N1610 BUSSE ROAD, SUITE 100
WAUKESHA, WISCONSIN 53188
P. 262.513.0666

CLIENT:
PROPERTY REVISION
REALTY / CONSTRUCTION / DESIGN

CLIENT ADDRESS:
3049 WEST BRIDGE STREET
GREENFIELD, WI 53221

PROJECT:
17400 WEST NATIONAL AVENUE

PROJECT LOCATION:
17400 WEST NATIONAL AVENUE
NEW BERLIN, WI 53146

PLAN MODIFICATIONS:

#	Date:	Description:
1	7/17/2020	INITIAL CITY SUBMITTAL
2	11/30/2020	REVISED CITY SUBMITTAL
3	12/24/2020	REVISED CITY SUBMITTAL
4		
5		
6		
7		
8		
9		
10		
11		
12		
13		
14		
15		

Design/Drawn:	APM
Approved:	TJB
Date:	7/17/2020

SHEET TITLE:
DEMOLITION PLAN

SHEET NUMBER:
C1.0

JSD PROJECT NO: 20-9753

THESE PLANS AND DESIGNS ARE COPYRIGHT PROTECTED AND MAY NOT BE USED IN WHOLE OR IN PART WITHOUT THE WRITTEN CONSENT OF JSD PROFESSIONAL SERVICES, INC.

File: R:\2020\20975\3\DWG\Civil Sheets\20-9753 C1.0 - Demolition Plan.dwg Layout: C1.0 User: jaimon Plotted: Dec 30, 2020 - 11:09am Xref's:

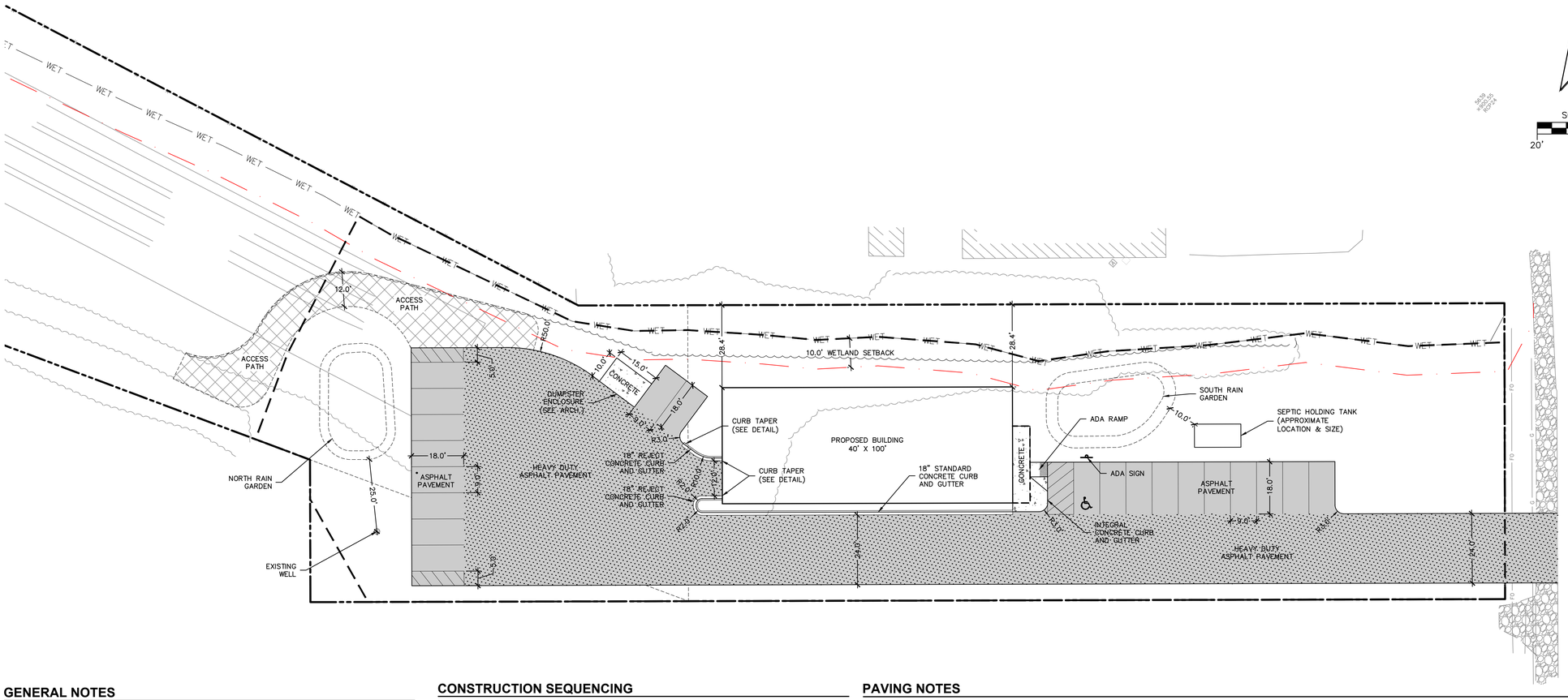

GENERAL NOTES

1. REFER TO THE EXISTING CONDITIONS PLAN FOR EXISTING CONDITIONS NOTES AND LEGENDS.
2. ALL WORK IN THE ROW AND/OR PUBLIC EASEMENTS SHALL BE IN ACCORDANCE WITH THE STANDARD SPECIFICATIONS FOR SEWER & WATER CONSTRUCTION IN WISCONSIN AND MUNICIPAL REQUIREMENTS.
3. EXISTING GRADE SPOT ELEVATIONS SHOWN FOR INFORMATIONAL PURPOSES. DURING CONSTRUCTION MATCH EXISTING GRADES AT CONSTRUCTION LIMITS.
4. JSD PROFESSIONAL SERVICES, INC. (JSD) SHALL BE HELD HARMLESS AND DOES NOT WARRANT ANY DEVIATIONS BY THE OWNER/CONTRACTOR FROM THE APPROVED CONSTRUCTION PLANS THAT MAY RESULT IN DISCIPLINARY ACTIONS BY ANY OR ALL REGULATORY AGENCIES.

LEGEND

- PROPERTY LINE
- BUILDING OUTLINE
- EDGE OF PAVEMENT
- CONCRETE CURB AND GUTTER
- STANDARD DUTY ASPHALT PAVEMENT
- HEAVY DUTY ASPHALT PAVEMENT
- CONCRETE PAVEMENT
- SIGN
- DISTURBED AREA LIMITS

SITE DATA TABLE

SITE ADDRESS	17400 W. NATIONAL AVENUE
NUMBER OF PARKING STALLS	20
ACCESSIBLE	1
EXISTING VS. PROPOSED PROPERTY COVERAGE	
EXISTING IMPERVIOUS SURFACE AREA	7,993 SQ. ST.
EXISTING PERVIOUS SURFACE AREA	154,603 SQ. FT.
EXISTING IMPERVIOUS SURFACE AREA RATIO	0.05
PROPOSED IMPERVIOUS SURFACE AREA	26,392 SQ. FT.
NET NEW IMPERVIOUS SURFACE AREA	18,399 SQ. FT.
PROPOSED PERVIOUS SURFACE AREA	136,204 SQ. FT.
PROPOSED IMPERVIOUS SURFACE AREA RATIO	0.16
TOTAL DISTURBED AREA	39,227 SQUARE FEET

CONSTRUCTION SEQUENCING

1. INSTALL PERIMETER SILT FENCE AND TEMPORARY CONSTRUCTION ENTRANCE.
2. PERFORM DEMOLITION/REMOVE EXISTING PAVEMENT, BUILDING FOUNDATION, AND FEATURES AS IDENTIFIED.
3. STRIP AND STOCKPILE TOPSOIL, INSTALL SILT FENCE AROUND PERIMETER OF STOCKPILE.
4. CONDUCT ROUGH GRADING EFFORTS AND INSTALL CHECK DAMS WITHIN DRAINAGE DITCHES AS NEEDED.
5. COMPLETE FINAL GRADING, INSTALLATION OF GRAVEL BASE COURSES, PLACEMENT OF CURBS, PAVEMENTS, ETC.
6. PLACE TOPSOIL AND IMMEDIATELY STABILIZE DISTURBED AREAS WITH EROSION CONTROL MEASURES AS INDICATED ON PLANS.
7. EROSION CONTROLS SHALL NOT BE REMOVED UNTIL SITE IS FULLY STABILIZED OR 70% VEGETATIVE COVER IS ESTABLISHED.

CONTRACTOR MAY MODIFY SEQUENCING AFTER ITEM NO. 1 AS NEEDED TO COMPLETE CONSTRUCTION IF EROSION CONTROLS ARE MAINTAINED IN ACCORDANCE WITH THE CONSTRUCTION SITE EROSION CONTROL REQUIREMENTS.

UTILITY NOTES

1. ALL EXISTING UTILITIES ARE SHOWN FOR INFORMATIONAL PURPOSES ONLY AND ARE NOT GUARANTEED TO BE ACCURATE OR ALL INCLUSIVE. THE CONTRACTOR IS RESPONSIBLE FOR MAKING HIS OWN DETERMINATION AS TO THE TYPE AND LOCATIONS OF UNDERGROUND UTILITIES AS MAY BE NECESSARY TO AVOID DAMAGE THERETO. CONTRACTOR/OWNER SHALL CALL "DIGGER'S HOTLINE" PRIOR TO ANY CONSTRUCTION.
2. PRIOR TO CONSTRUCTION, THE PRIME CONTRACTOR IS RESPONSIBLE FOR:
   - EXAMINING ALL SITE CONDITIONS RELATIVE TO THE CONDITIONS INDICATED ON THE ENGINEERING DRAWINGS. ANY DISCREPANCIES ARE TO BE REPORTED TO THE ENGINEER AND RESOLVED PRIOR TO THE START OF CONSTRUCTION.
   - OBTAINING ALL PERMITS INCLUDING PERMIT COSTS, TAP FEES, METER DEPOSITS, BONDS, AND ALL OTHER FEES REQUIRED FOR PROPOSED WORK TO OBTAIN OCCUPANCY.
   - VERIFYING ALL ELEVATIONS, LOCATIONS AND SIZES OF SANITARY, WATER AND STORM LATERALS AND CHECKING ALL UTILITY CROSSINGS FOR CONFLICTS. NOTIFY ENGINEER OF ANY DISCREPANCY. NO WORK SHALL BE PERFORMED UNTIL THE DISCREPANCY IS RESOLVED.
   - NOTIFYING ALL UTILITIES PRIOR TO INSTALLATION OF ANY UNDERGROUND IMPROVEMENTS.
   - NOTIFYING THE DESIGN ENGINEER AND MUNICIPALITY 48 HOURS PRIOR TO THE START OF CONSTRUCTION TO ARRANGE FOR APPROPRIATE CONSTRUCTION OBSERVATION.
   - COORDINATING ALL CONSTRUCTION WITH OTHER CONTRACTORS INVOLVED WITH CONSTRUCTION OF THE PROPOSED DEVELOPMENT AND FOR REPORTING ANY ERRORS OR DISCREPANCIES BETWEEN THESE PLANS AND PLANS PREPARED BY OTHERS.
3. ALL UTILITY WORK SHALL BE DONE IN ACCORDANCE WITH THE STANDARD SPECIFICATIONS FOR SEWER AND WATER CONSTRUCTION IN WISCONSIN HEREIN REFERRED TO AS THE STANDARD SPECIFICATIONS AND ALL APPLICABLE STATE AND LOCAL CODES AND SPECIFICATIONS. IT IS THE CONTRACTORS RESPONSIBILITY TO DETERMINE WHICH SPECIFICATIONS AND CODES APPLY, AND TO COORDINATE ALL CONSTRUCTION ACTIVITIES WITH THE APPROPRIATE LOCAL AND STATE AUTHORITIES.
4. SPECIFICATIONS SHALL COMPLY WITH THE CITY OF NEW BERLIN ORDINANCES AND WISCONSIN DEPARTMENT OF SAFETY AND PROFESSIONAL SERVICES DSPS 382.
5. TRACER WIRES SHALL BE INSTALLED AS NECESSARY IN ACCORDANCE WITH 182.0715(2R) OF THE STATE STATUTES AND CITY OF NEW BERLIN REQUIREMENTS.
6. THE PRIME CONTRACTOR IS RESPONSIBLE FOR COORDINATING ALL CONSTRUCTION WITH OTHER CONTRACTORS INVOLVED WITH CONSTRUCTION OF THE PROPOSED DEVELOPMENT AND FOR REPORTING ANY ERRORS OR DISCREPANCIES BETWEEN THESE PLANS AND PLANS PREPARED BY OTHERS.
7. THE CONTRACTOR IS RESPONSIBLE FOR PROVIDING THE ENGINEER WITH AS-BUILT CONDITIONS OF THE DESIGNATED IMPROVEMENTS IN ORDER THAT THE APPROPRIATE DRAWINGS CAN BE PREPARED, IF REQUIRED. ANY CHANGES TO THE DRAWINGS OR ADDITIONAL ITEMS MUST BE REPORTED TO THE ENGINEER AS WORK PROGRESSES.

PAVING NOTES

1. GENERAL
   - 1.1 ALL PAVING SHALL CONFORM TO "STATE OF WISCONSIN STANDARD SPECIFICATIONS FOR HIGHWAY & STRUCTURE CONSTRUCTION, LATEST EDITION, APPLICABLE CITY OF NEW BERLIN ORDINANCES AND THE GEOTECHNICAL REPORT PREPARED BY CGC, INC. DATED JULY 14, 2020.
   - 1.2 FINAL PAVEMENT DESIGN TO BE DETERMINED BY OWNER BASED ON GEOTECHNICAL ENGINEER OF RECORD RECOMMENDATIONS. ALL PAVING SHALL BE PERFORMED IN ACCORDANCE WITH THE GEOTECHNICAL ENGINEER OF RECORD RECOMMENDATIONS AS SPECIFIED IN THE GEOTECHNICAL REPORT.
   - 1.3 THE CITY OF NEW BERLIN AND JSD SHALL BE NOTIFIED 48 HOURS IN ADVANCE OF PERFORMING ANY CONSTRUCTION.
   - 1.4 ALL DIMENSIONS AND RADII ARE REFERENCED TO FACE OF CURB OR EDGE OF PAVEMENT, UNLESS SPECIFIED OTHERWISE.
2. ASPHALTIC CONCRETE PAVING SPECIFICATIONS
   - 2.1 CODES AND STANDARDS – THE PLACING, CONSTRUCTION AND COMPOSITION OF THE ASPHALTIC BASE COURSE AND ASPHALTIC CONCRETE SURFACE COURSE SHALL BE IN ACCORDANCE WITH THE REQUIREMENTS OF SECTIONS 450, 455, 460 AND 465 OF THE STATE OF WISCONSIN STANDARD SPECIFICATIONS FOR HIGHWAY AND STRUCTURE CONSTRUCTION, EDITION OF 2019. HEREAFTER, THIS PUBLICATION WILL BE REFERRED TO AS STATE HIGHWAY SPECIFICATIONS.
   - 2.2 WEATHER LIMITATIONS – APPLY TACK COATS WHEN AMBIENT TEMPERATURE IS ABOVE 50° F (10° C) AND WHEN TEMPERATURE HAS NOT BEEN BELOW 35° F (1° C) FOR 12 HOURS IMMEDIATELY PRIOR TO APPLICATION. DO NOT APPLY WHEN BASE IS WET OR CONTAINS EXCESS OF MOISTURE. CONSTRUCT ASPHALTIC CONCRETE SURFACE COURSE WHEN ATMOSPHERIC TEMPERATURE IS ABOVE 40° F (4° C) AND WHEN BASE IS DRY AND WHEN WEATHER IS NOT RAINY. BASE COURSE MAY BE PLACED WHEN AIR TEMPERATURE IS ABOVE 30° F (–1° C).
   - 2.3 GRADE CONTROL – ESTABLISH AND MAINTAIN REQUIRED LINES AND ELEVATIONS FOR EACH COURSE DURING CONSTRUCTION.
   - 2.4 CRUSHED AGGREGATE BASE COURSE – THE TOP LAYER OF BASE COURSE SHALL CONFORM TO SECTIONS 301 AND 305, STATE HIGHWAY SPECIFICATIONS. CLEAN RECYCLED CRUSHED CONCRETE MAY BE USED IF APPROVED BY GEOTECHNICAL ENGINEER OF RECORD.
   - 2.5 BINDER COURSE AGGREGATE – THE AGGREGATE FOR THE BINDER COURSE SHALL CONFORM TO SECTIONS 460.2.7 AND 315, STATE HIGHWAY SPECIFICATIONS.
   - 2.6 SURFACE COURSE AGGREGATE – THE AGGREGATE FOR THE SURFACE COURSE SHALL CONFORM TO SECTIONS 460.2.7 AND 465, STATE HIGHWAY SPECIFICATIONS.
   - 2.7 ASPHALTIC MATERIALS – THE ASPHALTIC MATERIALS SHALL CONFORM TO SECTION 455 AND 460, STATE HIGHWAY SPECIFICATIONS.
   - 2.8 SURFACE PREPARATION – NOTIFY CONTRACTOR OF UNSATISFACTORY CONDITIONS. DO NOT BEGIN PAVING WORK UNTIL DEFICIENT SUBBASE AREAS HAVE BEEN CORRECTED AND ARE READY TO RECEIVE PAVING.
3. CONCRETE PAVING SPECIFICATIONS
   - 3.1 CODES AND STANDARDS – THE PLACING, CONSTRUCTION AND COMPOSITION OF THE CONCRETE PAVEMENT SHALL BE IN ACCORDANCE WITH THE REQUIREMENTS OF SECTIONS 415 AND 416 OF THE STATE OF WISCONSIN STANDARD SPECIFICATIONS FOR HIGHWAY AND STRUCTURE CONSTRUCTION, CURRENT EDITION. HEREAFTER, THIS PUBLICATION WILL BE REFERRED TO AS STATE HIGHWAY SPECIFICATIONS.
   - 3.2 REINFORCEMENT – CONCRETE PAVEMENT SHALL BE REINFORCED WITH NOVOMESH 950 (OR EQUAL) FIBER REINFORCEMENT AT A RATE OF 5 LBS/CUBIC YARD.
   - 3.3 CURING COMPOUNDS – CURING COMPOUNDS SHALL CONFORM TO SECTION 415 OF THE STATE HIGHWAY SPECIFICATIONS.
   - 3.4 FINISHING –
     - 3.4.1 CONTRACTOR SHALL PROVIDE CONTROL JOINTS AND CONSTRUCTION JOINTS OF ONE-QUARTER CONCRETE THICKNESS AT AN EQUAL RATIO OF LENGTH TO WIDTH WHEREVER POSSIBLE WITH A MAXIMUM LENGTH BETWEEN JOINTS OF 8' ON CENTER.
     - 3.4.2 EXTERIOR CONCRETE SURFACES SHALL BE BROOM FINISHED.
     - 3.4.3 ALL CONCRETE SURFACES TO BE SEALED WITH TYPE TK-26UV CONCRETE SEALANT.
   - 3.5 CRUSHED AGGREGATE BASE COURSE – THE BASE COURSE SHALL CONFORM TO SECTIONS 301 AND 305, STATE HIGHWAY SPECIFICATIONS. CLEAN RECYCLED CRUSHED CONCRETE MAY BE USED IF APPROVED BY GEOTECH ENGINEER OF RECORD.
   - 3.6 SURFACE PREPARATION – NOTIFY CONTRACTOR OF UNSATISFACTORY CONDITIONS. DO NOT BEGIN PAVING WORK UNTIL DEFICIENT SUBBASE AREAS HAVE BEEN CORRECTED AND ARE READY TO RECEIVE PAVING.
4. PAVEMENT MARKING SPECIFICATIONS
   - 4.1 CONTRACTOR SHALL COORDINATE STRIPING COLOR WITH OWNER PRIOR TO CONSTRUCTION.
   - 4.2 PROVIDE CONTRACTOR GRADE LATEX, STRIPING PAINT. ALL STRIPING SHALL BE APPLIED IN ACCORDANCE WITH MANUFACTURER'S SPECIFICATIONS.
   - 4.3 THOROUGHLY CLEAN SURFACES FREE OF DIRT, SAND, GRAVEL, OIL AND OTHER FOREIGN MATTER. CONTRACTOR RESPONSIBLE TO INSPECT PAVEMENT SURFACES FOR CONDITIONS AND DEFECTS THAT WILL ADVERSELY AFFECT QUALITY OF WORK, AND WHICH CANNOT BE PUT INTO AN ACCEPTABLE CONDITION THROUGH NORMAL PREPARATORY WORK AS SPECIFIED.
   - 4.4 DO NOT PLACE MARKING OVER UNSOUND PAVEMENTS. IF THESE CONDITIONS EXIST, NOTIFY OWNER. STARTING INSTALLATION CONSTITUTES CONTRACTOR'S ACCEPTANCE OF SURFACE AS SUITABLE FOR INSTALLATION.
   - 4.5 LAYOUT MARKINGS USING GUIDE LINES, TEMPLATES AND FORMS. STENCILS AND TEMPLATES SHALL BE PROFESSIONALLY MADE TO INDUSTRY STANDARDS. "FREE HAND" PAINTING OF ARROWS, SYMBOLS, OR WORDING SHALL NOT BE ALLOWED. APPLY STRIPES STRAIGHT AND EVEN.
   - 4.6 APPLY MARKING PAINT AT A RATE OF ONE (1) GALLON PER THREE TO FOUR HUNDRED (300-400) LINEAL FEET OF FOUR (4) INCH WIDE STRIPES. (OR TO MFG. SPECIFICATIONS)
   - 4.7 BARRICADE MARKED AREAS DURING INSTALLATION AND UNTIL THE MARKING PAINT IS DRIED AND READY FOR TRAFFIC.
   - 4.8 MARK AND STRIPE ADA PARKING SPACES APPROPRIATELY PER LOCAL CODES.

DIGGERS HOTLINE
Toll Free (800) 242-8511

JSD Professional Services, Inc.
Engineers • Surveyors • Planners

CREATE THE VISION TELL THE STORY

MADISON | MILWAUKEE | WAUSAU
APPLETON | KENOSHA | CHICAGO
COEUR D'ALENE

MILWAUKEE REGIONAL OFFICE
W238 N1610 BUSSE ROAD, SUITE 100
WAUKESHA, WISCONSIN 53188
P. 262.513.0666

CLIENT:
PROPERTY REVISION
REALTY / CONSTRUCTION / DESIGN

CLIENT ADDRESS:
3049 WEST BRIDGE STREET
GREENFIELD, WI 53221

PROJECT:
17400 WEST NATIONAL AVENUE

PROJECT LOCATION:
17400 WEST NATIONAL AVENUE
NEW BERLIN, WI 53146

PLAN MODIFICATIONS:

#	Date:	Description:
1	7/17/2020	INITIAL CITY SUBMITTAL
2	11/30/2020	REVISED CITY SUBMITTAL
3	12/24/2020	REVISED CITY SUBMITTAL
4		
5		
6		
7		
8		
9		
10		
11		
12		
13		
14		
15		

Design/Drawn:	APM
Approved:	TJB
Date:	7/17/2020

SHEET TITLE:
SITE PLAN

SHEET NUMBER:
C2.0

JSD PROJECT NO: 20-9753

THESE PLANS AND DESIGNS ARE COPYRIGHT PROTECTED AND MAY NOT BE USED IN WHOLE OR IN PART WITHOUT THE WRITTEN CONSENT OF JSD PROFESSIONAL SERVICES, INC.

File: R:\2020\20975\3\DWG\Civil Sheets\20-9753 C2.0 - Site Plan.dwg Layout: C2.0 User: jaimon Plotted: Dec 24, 2020 - 11:15am Xref's:

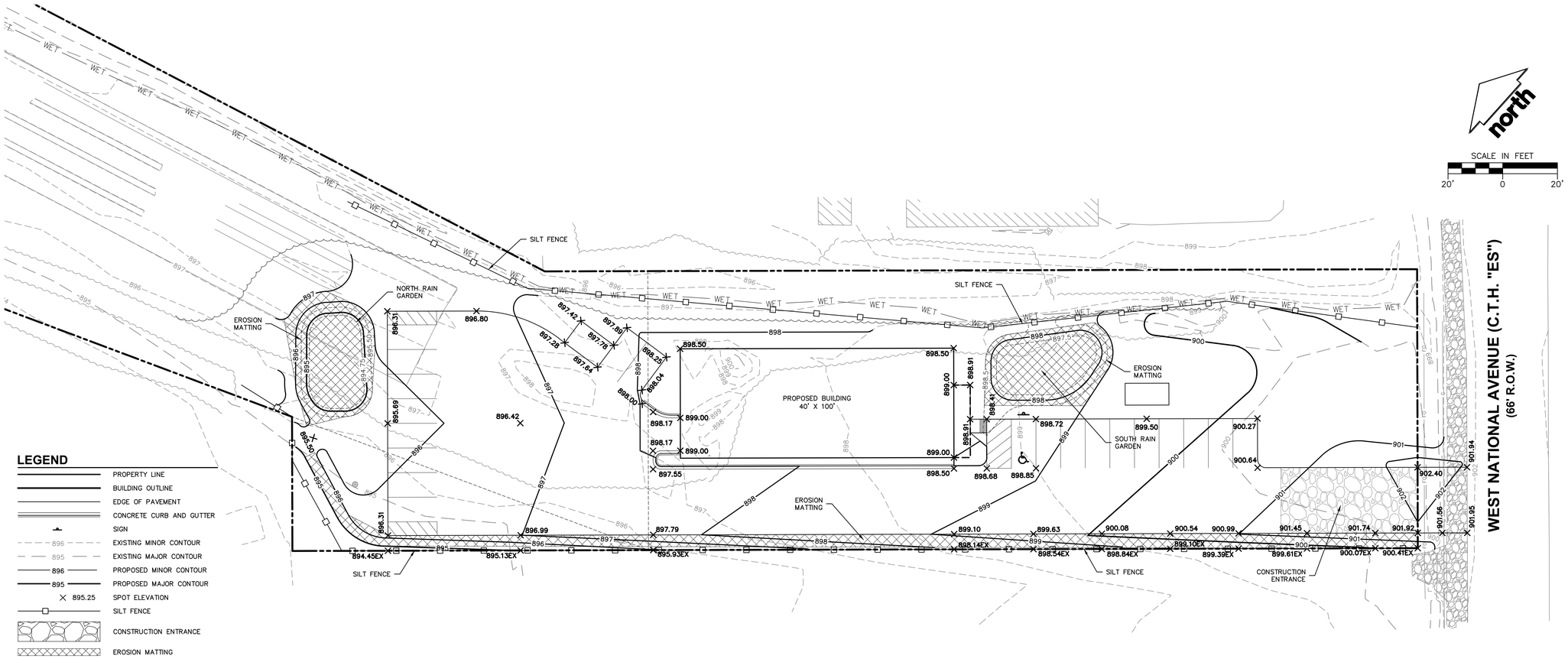

LEGEND

- PROPERTY LINE
- BUILDING OUTLINE
- EDGE OF PAVEMENT
- CONCRETE CURB AND GUTTER
- SIGN
- 896 EXISTING MINOR CONTOUR
- 895 EXISTING MAJOR CONTOUR
- 896 PROPOSED MINOR CONTOUR
- 895 PROPOSED MAJOR CONTOUR
- × 895.25 SPOT ELEVATION
- SILT FENCE
- CONSTRUCTION ENTRANCE
- EROSION MATTING

GRADING AND SEEDING NOTES

1. THE CONTRACTOR SHALL FIELD VERIFY THE FOLLOWING:
   A. ELEVATIONS OF THE BENCHMARKS PRIOR TO COMMENCING WORK.
   B. LOCATION AND ELEVATION OF:
      - EXISTING PIPE INVERTS
      - FLOOR ELEVATIONS
      - PAVEMENT WHERE MATCHING INTO EXISTING WORK
      - HORIZONTAL CONTROL BY REFERENCING SHOWN COORDINATES TO KNOWN PROPERTY LINES.

   NOTIFY JSD PROFESSIONAL SERVICES, INC (JSD) OF DISCREPANCIES IN EITHER VERTICAL OR HORIZONTAL CONTROL PRIOR TO PROCEEDING WITH WORK.
2. ALL PROPOSED GRADES SHOWN ARE FINISHED GRADES. CONTRACTOR SHALL VERIFY ALL GRADES, MAKE SURE ALL AREAS DRAIN PROPERLY AND SHALL REPORT ANY DISCREPANCIES TO JSD PRIOR TO THE START OF ANY CONSTRUCTION ACTIVITIES.
3. CONTRACTOR SHALL ASSUME SOLE RESPONSIBILITY FOR COMPUTATIONS OF ALL GRADING QUANTITIES. WHILE JSD ATTEMPTS TO PROVIDE A COST-EFFECTIVE APPROACH TO BALANCE EARTHWORK, GRADING DESIGN IS BASED ON MANY FACTORS, INCLUDING SAFETY, AESTHETICS, AND COMMON ENGINEERING STANDARDS OF CARE. THEREFORE, NO GUARANTEE CAN BE MADE FOR A BALANCED SITE.
4. THE CONTRACTOR MAY SOLICIT APPROVAL FROM JSD/OWNER TO ADJUST FINAL GRADES FROM DESIGN GRADES TO PROVIDE AN OVERALL SITE BALANCE AS A RESULT OF FIELD CONDITIONS.
5. ALL UNSURFACED AREAS ARE TO RECEIVE FOUR INCHES OF TOPSOIL AND BE SEEDED, MULCHED, AND WATERED UNTIL A HEALTHY STAND OF GRASS IS OBTAINED.
6. THIS GRADING PLAN IS BASED ON A TOPOGRAPHIC SURVEY. SOME FIELD ADJUSTMENTS MAY BE NECESSARY AT POINTS WHERE PROPOSED GRADES MEET EXISTING. REVIEW ANY REQUIRED CHANGES WITH JSD PRIOR TO CONSTRUCTION OF WORK.
7. PROPERTY CORNER MARKERS SHALL BE CAREFULLY PROTECTED. MONUMENTS DISTURBED BY THE CONTRACTOR'S OPERATIONS SHALL BE REPLACED AT THE CONTRACTOR'S EXPENSE.
8. PROPOSED CONTOURS ARE PROVIDED FOR INFORMATIONAL PURPOSES ONLY. ALL CONSTRUCTION SHALL BE BASED UPON PROPOSED SPOT ELEVATIONS WHERE PROVIDED.
9. PARKING LOT AND DRIVEWAY ELEVATIONS ARE PAVEMENT GRADES, NOT TOP OF CURB GRADES, UNLESS OTHERWISE NOTED.
10. ALL EXCAVATIONS AND MATERIAL PLACEMENT SHALL BE COMPLETED TO DESIGN ELEVATIONS AS DEPICTED IN THE PLANS.
11. GRADING ACTIVITIES SHALL BE IN A MANNER TO ALLOW POSITIVE DRAINAGE ACROSS DISTURBED SOILS, WHICH MAY INCLUDE EXCAVATION OF TEMPORARY DITCHES TO PREVENT PONDING, AND IF NECESSARY, PUMPING TO ALLEVIATE PONDING. CONTRACTOR SHALL PREVENT SURFACE WATER FROM ENTERING INTO EXCAVATIONS. IN NO WAY SHALL OWNER BE RESPONSIBLE FOR REMEDIATION OF UNSUITABLE SOILS CREATED/ORIGINATED AS A RESULT OF IMPROPER SITE GRADING OR SEQUENCING. CONTRACTOR SHALL SEQUENCE GRADING ACTIVITIES TO LIMIT EXPOSURE OF DISTURBED SOILS DUE TO WEATHER.
12. THE CONTRACTOR IS RESPONSIBLE FOR MEETING MINIMUM COMPACTION STANDARDS AS RECOMMENDED BY THE GEOTECHNICAL ENGINEER. CONTRACTOR SHALL REFER TO THE GEOTECHNICAL ENGINEERING REPORT FOR SITE COMPACTION REQUIREMENTS. THE CONTRACTOR SHALL NOTIFY ENGINEER/OWNER IF PROPER COMPACTION CANNOT BE OBTAINED. THE PROJECT'S GEOTECHNICAL CONSULTANT SHALL DETERMINE WHICH IN-SITU SOILS ARE TO BE CONSIDERED UNSUITABLE SOILS. THE ENGINEER/OWNER AND GEOTECHNICAL TESTING CONSULTANT WILL DETERMINE IF REMEDIAL MEASURES WILL BE NECESSARY.
13. IN THE EVENT THAT ANY MOISTURE-DENSITY TEST(S) FAIL TO MEET SPECIFICATION REQUIREMENTS, THE CONTRACTOR SHALL PERFORM CORRECTIVE WORK AS NECESSARY TO BRING THE MATERIAL INTO COMPLIANCE AND RETEST THE FAILED AREA AT NO COST TO THE OWNER.
14. THE CONTRACTOR SHALL IMMEDIATELY NOTIFY JSD/OWNER IF GROUNDWATER IS ENCOUNTERED DURING EXCAVATION.
15. CONTRACTOR IS SOLELY RESPONSIBLE FOR THE DESIGN AND CONSTRUCTION OF ADEQUATE AND SAFE TEMPORARY SHORING, BRACING, RETENTION STRUCTURES, AND EXCAVATIONS.
16. THE SITE SHALL BE COMPLETED TO WITHIN 0.10-FT (+/-) OF THE PROPOSED GRADES AS INDICATED WITHIN THE PLANS PRIOR TO PLACEMENT OF TOPSOIL OR STONE. CONTRACTOR IS ENCOURAGED TO SEQUENCE CONSTRUCTION SUCH THAT THE SITE IS DIVIDED INTO SMALLER AREAS TO ALLOW STABILIZATION OF DISTURBED SOILS IMMEDIATELY UPON COMPLETION OF INDIVIDUAL SMALLER AREAS.
17. CONTRACTOR SHALL CONTACT "DIGGER'S HOTLINE" FOR LOCATIONS OF ALL EXISTING UTILITIES PRIOR TO COMMENCEMENT OF ANY CONSTRUCTION ACTIVITIES AND SHALL BE RESPONSIBLE FOR PROTECTING SAID UTILITIES FROM ANY DAMAGE DURING CONSTRUCTION.
18. WORK WITHIN ANY ROADWAY RIGHT-OF-WAY SHALL BE COORDINATED WITH THE APPROPRIATE AUTHORITY HAVING JURISDICTION PRIOR TO COMMENCEMENT OF ANY CONSTRUCTION ACTIVITIES. CONTRACTOR SHALL BE RESPONSIBLE FOR OBTAINING ALL NECESSARY PERMITS AND FEES. GRADING WITHIN RIGHT-OF-WAY IS SUBJECT TO APPROVAL BY SAID AUTHORITY. RESTORATION OF RIGHT-OF-WAY IS CONSIDERED INCIDENTAL AND SHALL BE INCLUDED IN THE COST OF GRADING. RESTORATION SHALL INCLUDE ALL ITEMS NECESSARY TO RESTORE RIGHT-OF-WAY IN-KIND INCLUDING LANDSCAPING.
19. CONTRACTOR SHALL COMPLY WITH ALL CITY AND/OR STATE CONSTRUCTION STANDARDS/ORDINANCES.
20. CONTRACTOR SHALL PROVIDE NOTICE TO THE MUNICIPALITY IN ADVANCE OF ANY SOIL DISTURBING ACTIVITIES, IN ACCORDANCE WITH MUNICIPAL REQUIREMENTS.
21. ALL DISTURBED AREAS SHALL BE SODDED AND/OR SEEDED AND MULCHED IMMEDIATELY FOLLOWING GRADING ACTIVITIES. SOD/SEED MIX TO BE IN ACCORDANCE WITH LANDSCAPE PLAN.
22. CONTRACTOR SHALL WATER ALL NEWLY SODDED/SEEDED AREAS DURING THE SUMMER MONTHS WHENEVER THERE IS A 7 DAY LAPSE WITH NO SIGNIFICANT RAINFALL.
23. CONTRACTOR TO DEEP TILL ALL COMPACTED PERVIOUS SURFACES PRIOR TO SODDING AND/OR SEEDING AND MULCHING.
24. ALL SLOPES 20% OR GREATER SHALL RECEIVE TEMPORARY SEED AND MULCH, OR OTHER MEANS OF COVER PLACED ON THEM WITHIN 2 WEEKS OF DISTURBANCE.
25. ALL EXPOSED SOIL AREAS THAT WILL NOT BE BROUGHT TO FINAL GRADE OR ON WHICH LAND DISTURBING ACTIVITIES WILL NOT BE PERFORMED FOR A PERIOD GREATER THAN 30 DAYS AND REQUIRE VEGETATIVE COVER FOR LESS THAN 1 YEAR, REQUIRE TEMPORARY SEEDING FOR EROSION CONTROL. SEEDING FOR EROSION CONTROL SHALL BE IN ACCORDANCE WITH WDNR TECHNICAL STANDARD 1059 AND CITY OF RACINE ORDINANCES.

EROSION CONTROL NOTES

1. ALL CONSTRUCTION SHALL ADHERE TO THE REQUIREMENTS SET FORTH IN WISCONSIN'S NATIONAL POLLUTANT DISCHARGE ELIMINATION SYSTEM (NPDES) STORMWATER GENERAL PERMIT FOR CONSTRUCTION SITE LAND DISTURBANCE ACTIVITIES. ALL EROSION AND SEDIMENT CONTROL MEASURES ARE TO BE CONSTRUCTED AND MAINTAINED IN ACCORDANCE WITH THE WISCONSIN DEPARTMENT OF NATURAL RESOURCES (WDNR) TECHNICAL STANDARDS AND THE CITY OF NEW BERLIN ORDINANCES. IT IS THE RESPONSIBILITY OF ALL CONTRACTORS ASSOCIATED WITH THE PROJECT TO OBTAIN A COPY OF, AND UNDERSTAND, THESE STANDARDS PRIOR TO THE START OF CONSTRUCTION ACTIVITIES.
2. THE EROSION CONTROL MEASURES INDICATED ON THE PLANS ARE THE MINIMUM REQUIREMENTS. ADDITIONAL CONTROL MEASURES AS DIRECTED BY JSD OR AUTHORITY HAVING JURISDICTION SHALL BE INSTALLED WITHIN 24 HOURS OF REQUEST.
3. MODIFICATIONS TO THE APPROVED EROSION CONTROL PLAN IN ORDER TO MEET UNFORESEEN FIELD CONDITIONS ARE ALLOWED IF MODIFICATIONS CONFORM TO WDNR TECHNICAL STANDARDS. CONTRACTOR IS RESPONSIBLE TO NOTIFY JSD AND AUTHORITY HAVING JURISDICTION OF ANY CHANGES TO THE EROSION CONTROL AND STORMWATER MANAGEMENT PLANS. ALL MODIFICATIONS MUST BE APPROVED BY JSD/AUTHORITY HAVING JURISDICTION PRIOR TO DEVIATION FROM THE APPROVED PLAN.
4. INSTALL PERIMETER EROSION CONTROL MEASURES (SUCH AS CONSTRUCTION ENTRANCE(S) AND SILT FENCE) PRIOR TO ANY SITE WORK, INCLUDING GRADING OR DISTURBANCE OF EXISTING SURFACE COVER, AS SHOWN ON PLAN IN ORDER TO PROTECT ADJACENT PROPERTIES FROM SEDIMENT TRANSPORT.
5. CONSTRUCTION ENTRANCE(S) SHALL BE INSTALLED AT THE LOCATION OF VEHICLE INGRESS/EGRESS POINT(S) AS SHOWN ON THE PLAN. CONTRACTOR IS RESPONSIBLE TO COORDINATE LOCATION(S) WITH THE PROPER AUTHORITY HAVING JURISDICTION, PROVIDE NECESSARY FEES AND OBTAIN ALL REQUIRED APPROVALS OR PERMITS. ADDITIONAL CONSTRUCTION ENTRANCES OTHER THAN AS SHOWN ON THE PLANS MUST BE PRIOR APPROVED BY THE APPLICABLE AUTHORITY HAVING JURISDICTION PRIOR TO INSTALLATION. CONSTRUCTION ENTRANCES SHALL BE MAINTAINED BY THE CONTRACTOR IN A CONDITION WHICH WILL PREVENT THE TRACKING OF MUD OR DRY SEDIMENT ONTO ADJACENT PUBLIC STREETS AFTER EACH WORKING DAY OR MORE FREQUENTLY AS REQUIRED.
6. PAVED SURFACES ADJACENT TO CONSTRUCTION ENTRANCES SHALL BE SWEPT AND/OR SCRAPED TO REMOVE ACCUMULATED SOIL, DIRT AND/OR DUST AFTER THE END OF EACH WORK DAY AND AS REQUESTED BY THE AUTHORITY HAVING JURISDICTION.
7. ALL TEMPORARY AND PERMANENT EROSION CONTROL MEASURES MUST BE MAINTAINED AND REPAIRED AS NEEDED. THE GENERAL CONTRACTOR WILL BE RESPONSIBLE FOR INSPECTION AND REPAIR DURING CONSTRUCTION. THE OWNER WILL BE RESPONSIBLE IF EROSION CONTROL IS REQUIRED AFTER THE CONTRACTOR HAS COMPLETED THE PROJECT.
8. DITCH CHECKS AND APPLICABLE EROSION NETTING/MATTING SHALL BE INSTALLED IMMEDIATELY AFTER COMPLETION OF GRADING EFFORTS WITHIN DITCHES/SWALES TO PREVENT SOIL TRANSPORTATION.
9. CONTRACTOR SHALL SUBMIT PLAN FOR LOCATION OF TEMPORARY TOPSOIL STOCKPILES TO ENGINEER FOR APPROVAL. INSTALL EROSION CONTROLS ON THE DOWNSTREAM SIDE OF STOCKPILES. IF STOCKPILE REMAINS UNDISTURBED FOR MORE THAN SEVEN (7) DAYS, TEMPORARY SEEDING AND STABILIZATION IN ACCORDANCE WITH WDNR TECHNICAL STANDARDS IS REQUIRED. IF DISTURBANCE OCCURS BETWEEN NOVEMBER 15TH AND MAY 15TH, THE MULCHING SHALL BE PERFORMED BY HYDRO-MULCHING WITH A "TACKIFIER."
10. EROSION CONTROL MEASURES TEMPORARILY REMOVED FOR UNAVOIDABLE CONSTRUCTION ACTIVITIES SHALL BE IN WORKING ORDER PRIOR TO THE COMPLETION OF EACH WORK DAY.
11. DEWATERING, IF NECESSARY, SHALL BE IN ACCORDANCE WITH WDNR TECHNICAL SPECIFICATION 1061. PUMPS MAY BE USED AS BYPASS DEVICES. IN NO CASE SHALL PUMPED WATER BE DIVERTED OUTSIDE THE PROJECT LIMITS.
12. GRADING EFFORTS SHALL BE CONDUCTED IN SUCH A MANNER AS TO MINIMIZE EROSION. EROSION AND SEDIMENT CONTROL MEASURES SHALL CONSIDER THE TIME OF YEAR, SITE CONDITIONS, AND THE USE OF TEMPORARY OR PERMANENT MEASURES. ALL DISTURBED AREAS THAT WILL NOT BE WORKED FOR A PERIOD OF FOURTEEN (14) DAYS REQUIRE TEMPORARY SEEDING FOR EROSION CONTROL. SEEDING FOR EROSION CONTROL SHALL BE IN ACCORDANCE WITH WDNR TECHNICAL STANDARDS.
13. ALL DISTURBED SLOPES EXCEEDING 4:1 YET LESS THAN 3:1, SHALL BE STABILIZED WITH NORTH AMERICAN GREEN S75BN EROSION MATTING (OR APPROVED EQUAL) OR APPLICATION OF AN APPROVED POLYMER SOIL STABILIZATION TREATMENT OR A COMBINATION THEREOF, AS REQUIRED WITHIN 7 DAYS OF REACHING FINAL GRADE AND/OR AS SOON AS CONDITIONS ALLOW. DRAINAGE SWALES SHALL BE STABILIZED WITH CLASS II, TYPE B EROSION MATTING. EROSION MATTING AND/OR NETTING USED ONSITE SHALL BE INSTALLED IN ACCORDANCE WITH MANUFACTURER'S GUIDELINES AND WDNR TECHNICAL STANDARDS 1052 AND 1053.
14. STABILIZATION PRACTICES:

    STABILIZATION MEASURES SHALL BE INITIATED AS SOON AS PRACTICABLE IN PORTIONS OF THE SITE WHERE CONSTRUCTION ACTIVITIES HAVE TEMPORARILY OR PERMANENTLY CEASED. NO MORE THAN SEVEN (7) DAYS SHALL PASS AFTER THE CONSTRUCTION ACTIVITY IN THAT PORTION OF THE SITE HAS CEASED UNLESS:
    14.1. THE INITIATION STABILIZATION MEASURES BY THE SEVENTH (7) DAY AFTER CONSTRUCTION ACTIVITY HAS CEASED IS PRECLUDED BY SNOW COVER. IN THAT EVENT, STABILIZATION SHALL BE INITIATED AS SOON AS PRACTICABLE.
    14.2. CONSTRUCTION ACTIVITY WILL RESUME ON A PORTION OF THE SITE WITHIN FOURTEEN (14) DAYS FROM WHEN ACTIVITY CEASED, (I.E. THE TOTAL TIME PERIOD THAT THE CONSTRUCTION ACTIVITY IS TEMPORARILY CEASED IS LESS THAN FOURTEEN (14) DAYS. IN THAT EVENT, STABILIZATION MEASURES DO NOT HAVE TO BE INITIATED ON THAT PORTION OF THE SITE BY THE SEVENTH (7) DAY AFTER CONSTRUCTION ACTIVITY HAS TEMPORARILY CEASED.
    14.3. STABILIZATION MEASURES SHALL BE DETERMINED BASED ONSITE CONDITIONS AT THE TIME OF CONSTRUCTION ACTIVITY HAS CEASED, INCLUDING BUT NOT LIMITED TO WEATHER CONDITIONS AND LENGTH OF TIME MEASURE MUST BE EFFECTIVE. THE FOLLOWING ARE ACCEPTABLE STABILIZATION MEASURES:
    - PERMANENT SEEDING; IN ACCORDANCE WITH APPROVED CONSTRUCTION SPECIFICATION
    - TEMPORARY SEEDING; MAY CONSIST OF SPRING OATS (100LBS/ACRE) AND/OR WHEAT OR CEREAL RYE (150LB/ACRE)
    - HYDRO-MULCHING WITH A TACKIFIER
    - GEOTEXTILE EROSION MATTING
    - SODDING
15. DURING PERIODS OF EXTENDED DRY WEATHER, THE CONTRACTOR SHALL KEEP A WATER TRUCK ON SITE FOR THE PURPOSE OF WATERING DOWN SOILS WHICH MAY OTHERWISE BECOME AIRBORNE. THE CONTRACTOR IS RESPONSIBLE FOR CONTROLLING WIND EROSION (DUST) DURING CONSTRUCTION AT THEIR EXPENSE. REFER TO WDNR TECHNICAL STANDARD 1068.
16. DISTURBED AREAS AND AREAS USED FOR STORAGE OF MATERIALS THAT ARE EXPOSED TO PRECIPITATION SHALL BE VISUALLY INSPECTED FOR EVIDENCE OF, OR THE POTENTIAL FOR, POLLUTANTS ENTERING THE DRAINAGE SYSTEM ON A DAILY BASIS.
17. MAINTAIN SOIL EROSION CONTROL DEVICES THROUGH THE DURATION OF THIS PROJECT. EROSION CONTROL MEASURES SHALL NOT BE REMOVED UNTIL ALL LAND DISTURBING CONSTRUCTION ACTIVITY AT THE SITE HAS BEEN COMPLETED AND A UNIFORM PERENNIAL VEGETATIVE COVER HAS BEEN ESTABLISHED WITH A DENSITY OF AT LEAST 70% FOR UNPAVED AREAS AND AREAS NOT COVERED BY PERMANENT STRUCTURES OR THAT EMPLOY EQUIVALENT PERMANENT STABILIZATION MEASURES. DISTURBANCE ASSOCIATED WITH EROSION CONTROL REMOVAL SHALL BE IMMEDIATELY STABILIZED.
18. QUALIFIED PERSONNEL (PROVIDED BY THE GENERAL/PRIME CONTRACTOR) SHALL INSPECT DISTURBED AREAS OF THE CONSTRUCTION SITE THAT HAVE NOT BEEN FINALLY STABILIZED AND EROSION AND SEDIMENT CONTROLS WITHIN 24 HOURS OF ALL 0.5-INCH, OR MORE, PRECIPITATION EVENTS WITH A MINIMUM INSPECTION INTERVAL OF ONCE EVERY SEVEN (7) CALENDAR DAYS IN THE ABSENCE OF A QUALIFYING RAIN OR SNOWFALL EVENT. REPORTING SHALL BE IN ACCORDANCE WITH PART IV D.4. (a-f). OF THE NPDES GENERAL PERMIT. CONTRACTOR SHALL IMMEDIATELY ARRANGE TO HAVE ANY DEFICIENT ITEMS REVEALED DURING INSPECTIONS REPAIRED/REPLACED.
19. THE FOLLOWING MAINTENANCE PRACTICES SHALL BE USED TO MAINTAIN, IN GOOD AND EFFECTIVE OPERATING CONDITIONS, VEGETATION, EROSION AND SEDIMENT CONTROL MEASURES, AND OTHER PROTECTIVE MEASURES IDENTIFIED IN THIS PLAN. UPON IDENTIFICATION, DEFICIENCIES IN STORMWATER CONTROLS SHALL BE ADDRESSED IMMEDIATELY. THE MAINTENANCE PROCEDURES FOR THIS DEVELOPMENT SHALL INCLUDE, BUT NOT BE LIMITED TO THOSE LISTED BELOW:
    - SILT FENCE – REPAIR OR REPLACE ANY DAMAGED FILTER FABRIC AND/OR STAKES. REMOVE ACCUMULATED SEDIMENT WHEN IT HAS REACHED ONE-HALF THE ABOVE GROUND HEIGHT OF THE FENCE.
    - CONSTRUCTION ENTRANCE – AS NEEDED, ADD STONE TO MAINTAIN CONSTRUCTION ENTRANCE DIMENSIONS AND EFFECTIVENESS.
    - EROSION CONTROL MATTING – REPAIR MATTING IMMEDIATELY IF INSPECTION REVEALS BREACHED OR FAILED CONDITIONS. REPAIR AND RE-GRADE SOIL WHERE CHANNELIZATION HAS OCCURRED.
    - DIVERSION BERM/SWALE – REPLACE OR RE-COMPACT THE CONSTRUCTION MATERIALS AS NECESSARY.

    ADDITIONAL POLLUTANT CONTROL MEASURES TO BE IMPLEMENTED DURING CONSTRUCTION ACTIVITIES SHALL INCLUDE, BUT NOT BE LIMITED TO THE FOLLOWING:

    - CONSTRUCTION WASTE SHALL BE PROPERLY DISPOSED OF. THIS INCLUDES ALL CONSTRUCTION SITE WASTE MATERIAL, SANITARY WASTE, AND WASTE FROM VEHICLE TRACKING OF SEDIMENTS. THE CONTRACTOR SHALL ENSURE THAT NO MATERIAL WASTES OR UNUSED BUILDING MATERIALS SHALL BE BURIED, DUMPED, BURNED, OR DISCHARGED TO THE WATERS OF THE STATE. VEHICLES HAULING MATERIAL AWAY FROM THE SITE SHALL BE COVERED WITH A TARPAULIN TO PREVENT BLOWING DEBRIS.
    - DUST CONTROL SHALL BE ACCOMPLISHED BY ONE OR MORE OF THE FOLLOWING METHODS:
      A. COVERING 30% OR MORE OF THE SOIL SURFACE WITH A NON-ERODIBLE MATERIAL.
      B. ROUGHENING THE SOIL TO PRODUCE RIDGES PERPENDICULAR TO THE PREVAILING WIND. RIDGES SHALL BE AT LEAST SIX (6) INCHES IN HEIGHT.
      C. FREQUENT WATERING OF EXCAVATION AND FILL AREAS.
      D. PROVIDING GRAVEL OR PAVING AT ENTRANCE/EXIT DRIVES, PARKING AREAS AND TRANSIT PATHS.
    - STREET SWEEPING SHALL BE PERFORMED TO IMMEDIATELY REMOVE ANY SEDIMENT TRACKED ON PAVEMENTS.
20. CONTRACTOR/OWNER SHALL FILE A NOTICE OF TERMINATION UPON COMPLETION OF THE PROJECT IN ACCORDANCE WITH WDNR REQUIREMENTS AND/OR PROPERTY SALE IN ACCORDANCE WITH WDNR REQUIREMENTS.

DIGGERS HOTLINE
Toll Free (800) 242-8511

JSD Professional Services, Inc.
Engineers • Surveyors • Planners
CREATE THE VISION TELL THE STORY
MADISON | MILWAUKEE | WAUSAU
APPLETON | KENOSHA | CHICAGO
COEUR D'ALENE
MILWAUKEE REGIONAL OFFICE
W238 N1610 BUSSE ROAD, SUITE 100
WAUKESHA, WISCONSIN 53188
P. 262.513.0666

CLIENT:
PROPERTY REVISION REALTY / CONSTRUCTION / DESIGN

CLIENT ADDRESS:
3049 WEST BRIDGE STREET
GREENFIELD, WI 53221

PROJECT:
17400 WEST NATIONAL AVENUE

PROJECT LOCATION:
17400 WEST NATIONAL AVENUE
NEW BERLIN, WI 53146

PLAN MODIFICATIONS:

#	Date:	Description:
1	7/17/2020	INITIAL CITY SUBMITTAL
2	11/30/2020	REVISED CITY SUBMITTAL
3	12/24/2020	REVISED CITY SUBMITTAL
4		
5		
6		
7		
8		
9		
10		
11		
12		
13		
14		
15		

Design/Drawn: APM
Approved: TJB
Date: 7/17/2020

SHEET TITLE:
GRADING & EROSION CONTROL PLAN

SHEET NUMBER:
C3.0

JSD PROJECT NO: 20-9753

THESE PLANS AND DESIGNS ARE COPYRIGHT PROTECTED AND MAY NOT BE USED IN WHOLE OR IN PART WITHOUT THE WRITTEN CONSENT OF JSD PROFESSIONAL SERVICES, INC.

File: R:\2020\20753\DWG\Civil Sheets\20-9753 C3.0 - Grading Plan.dwg Layout: C3.0 User: jainon Plotted: Dec 30, 2020 - 11:10am XrefS:

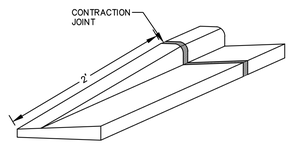

TAPER CURB HEAD

N.T.S.

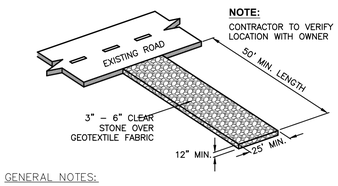

GENERAL NOTES:

1. TRACKING PADS SHALL BE INSTALLED PRIOR TO ANY TRAFFIC LEAVING THE SITE.
2. THE AGGREGATE FOR TRACKING PADS SHALL BE 3 TO 6–INCH CLEAR OR WASHED STONE. ALL MATERIAL TO BE RETAINED ON A 3–INCH SIEVE.
3. THE AGGREGATE SHALL BE PLACED IN A LAYER AT LEAST 12–INCHES THICK. ON SITES WHERE SATURATED CONDITIONS ARE EXPECTED DURING THE LIFE OF THE PAD, THE PAD SHALL BE UNDERLAIN WITH WisDOT TYPE "R" GEOTEXTILE FABRIC TO PREVENT MIGRATION OF UNDERLYING SOILS INTO THE STONE LAYER.
4. THE TRACKING PAD SHALL BE THE FULL WIDTH OF THE EGRESS POINT. THE TRACKING PAD SHALL BE A MINIMUM 50–FEET LONG.
5. ANY SEDIMENT TRACKED ONTO A PUBLIC OR PRIVATE ROAD SHOULD BE REMOVED BY STREET CLEANING, NOT FLUSHING, AT THE END OF EACH WORKING DAY.
6. TRACKING PADS SHALL, AT A MINIMUM, BE INSPECTED WEEKLY AND WITHIN 24–HOURS AFTER EVERY PRECIPITATION EVENT THAT PRODUCES 0.5–INCHES OF RAIN OR MORE DURING A 24–HOUR PERIOD.
7. THE TRACKING PAD PERFORMANCE SHALL BE MAINTAINED BY SCRAPING OR TOP–DRESSING WITH ADDITIONAL AGGREGATE.

CONSTRUCTION ENTRANCE

N.T.S.

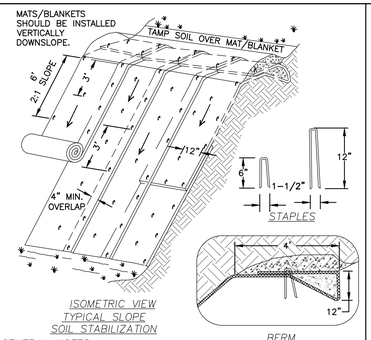

GENERAL NOTES:

1. EROSION MAT CONSTRUCTION SHALL BE IN ACCORDANCE WITH WISCONSIN DNR TECHNICAL STANDARD 1052 "NON–CHANNEL EROSION MAT".
2. ONLY WisDOT EROSION CONTROL PRODUCT ACCEPTABILITY LIST (PAL) APPROVED MATS SHALL BE ALLOWED. REFER TO EROSION CONTROL PLAN FOR EXACT MAT CLASSIFICATION.
3. APPLY PERMANENT SEEDING BEFORE PLACING BLANKETS.
4. LAY BLANKETS LOOSELY AND STAKE OR STAPLE TO MAINTAIN DIRECT CONTACT WITH THE SOIL. DO NOT STRETCH.
5. ONLY WisDOT EROSION CONTROL PRODUCT ACCEPTABILITY LIST (PAL) APPROVED MATS SHALL BE ALLOWED. REFER TO EROSION CONTROL PLAN FOR EXACT MAT CLASSIFICATION.

EROSION MATTING

N.T.S.

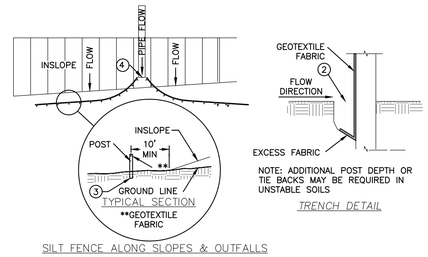

GENERAL NOTES

1. SILT FENCE SHALL BE ANCHORED BY SPREADING AT LEAST 8–INCHES OF FABRIC IN A 4–INCH WIDE AND 6–INCH DEEP TRENCH OR 6–INCH DEEP V–TRENCH ON THE UPSLOPE SIDE OF THE FENCE. TRENCHES SHALL NOT BE EXCAVATED WIDER OR DEEPER THAN NECESSARY FOR PROPER INSTALLATION.
2. FOLD MATERIAL TO FIT TRENCH AND BACKFILL AND COMPACT TRENCH WITH EXCAVATED SOIL.
3. WOOD POSTS SHALL BE A MINIMUM SIZE OF 1.125–INCHES x 1.125–INCHES OF DRIED OAK OR HICKORY.
4. SILT FENCE TO EXTEND ABOVE THE TOP OF PIPE.
5. SILT FENCE CONSTRUCTION AND GEOTEXTILE FABRIC SHALL CONFORM TO WDNR TECHNICAL STANDARD 1056.
6. POST SPACING SHALL BE SELECTED BASED ON GEOTEXTILE FABRIC (8–FEET FOR WOVEN & 3–FEET FOR NON–WOVEN)

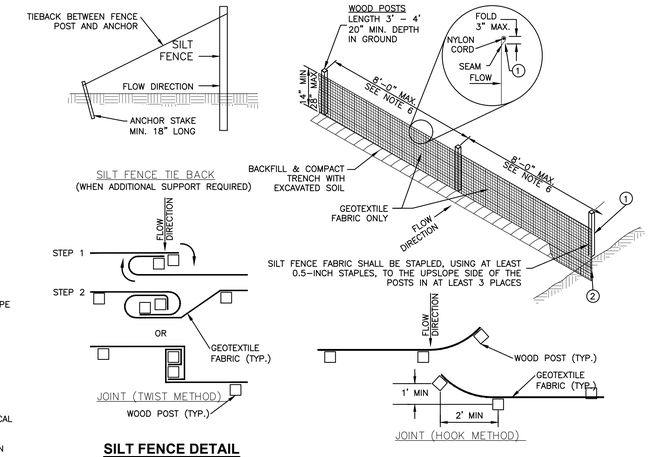

SILT FENCE DETAIL

N.T.S.

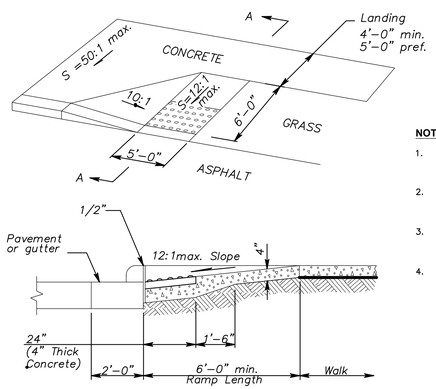

NOTES:

1. TEXTURE OF CONCRETE SURFACES SHALL BE OBTAINED BY COARSE BROOMING TRANSVERSE TO THE RAMP SLOPES AND SHALL BE ROUGHER THAN ADJACENT WALK.
2. INSTALL DETECTABLE WARNINGS (TRUNCATED DOMES) FOR A DISTANCE OF 24" FROM THE BACK OF THE CURB FOR THE ENTIRE WIDTH OF THE RAMP OPENING.
3. THE SURFACES OF ANY TWO ADJACENT DETECTABLE WARNING UNITS SHOULD NOT DIFFER BY MORE THAN $\frac{1}{8}$" IN HEIGHT.
4. EXPANSION JOINTS SHALL BE PROVIDED IN THE CURB RAMP AS EXTENSIONS OF WALK JOINTS AND CONSISTENT WITH REQUIREMENTS FOR A NEW CONCRETE WALK. LINES SHOWN ON THIS DRAWING INDICATE THE RAMP EDGE AND SLOPE CHANGES AND ARE NOT NECESSARILY JOINT LINES.

CURB RAMP

N.T.S.

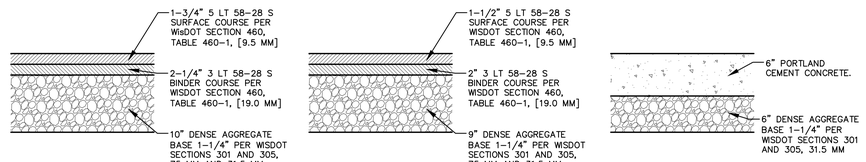

HEAVY DUTY ASPHALT PAVEMENT SECTION

LIGHT DUTY ASPHALT PAVEMENT SECTION

HEAVY DUTY CONCRETE PAVEMENT SECTION

PAVEMENT SECTIONS TO BE VERIFY BY GEOTECH

GENERAL NOTES:

1. REFER TO PAVEMENT RECOMMENDATIONS IN THE GEOTECHNICAL EXPLORATION REPORT, PREPARED BY CGC, INC. DATED JULY 14, 2020. IF THERE ARE ANY DISCREPANCIES BETWEEN THIS DETAIL AND THE PAVEMENT RECOMMENDATIONS PROVIDED IN THE GEOTECHNICAL INVESTIGATION REPORT, THE GEOTECHNICAL REPORT SHALL GOVERN.
2. WSDOT STANDARD SPECIFICATIONS FOR HIGHWAY AND STRUCTURE CONSTRUCTION, INCLUDING SUPPLEMENTAL SPECIFICATIONS, COMPACTION REQUIREMENTS:
   – BITUMINOUS CONCRETE: REFER TO SECTION 460–3.
   – BASE COURSE: REFER TO SECTION 301.3.4.2, STANDARD COMPACTION.
3. CONCRETE EQUIPMENT PADS SHALL HAVE A MINIMUM 6" THICK PORTLAND CEMENT CONCRETE OVER COMPACTED 6" THICK DENSE GRADED BASE WITH REINFORCEMENT FOR CRACK CONTROL.

PAVEMENT SECTIONS

N.T.S.

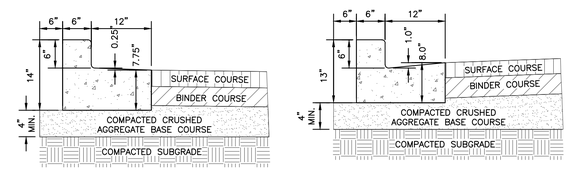

CONCRETE HIGH SIDE (REJECT) CURB & GUTTER

CONCRETE LOW SIDE (COLLECT) CURB & GUTTER

GENERAL NOTES

1. LATERAL CONTRACTION JOINTS SHALL BE PLACED AT INTERVALS OF NOT MORE THAN 15 FEET NOR LESS THAN 6 FEET. THE JOINTS SHALL BE A MINIMUM OF 3 INCHES IN DEPTH
2. EXPANSION JOINTS SHALL BE PLACED TRANSVERSELY AT RADIUS POINTS ON CURVES OF RADIUS 200 FEET OR LESS, AND AT ANGLE POINTS, OR AS DIRECTED BY THE ENGINEER OF RECORD. THE EXPANSION JOINT FILLER SHALL BE A ONE PIECE FIBER BOARD OR THE APPROVED EQUIVALENT MATERIAL HAVING THE SAME DIMENSIONS AS CURB & GUTTER AT THAT STATION AND BE 0.5 INCH THICK.
3. IN ALL CASES, CONCRETE CURB & GUTTER SHALL BE PLACED ON THOROUGHLY COMPACTED CRUSHED STONE

18" CURB AND GUTTER

N.T.S.

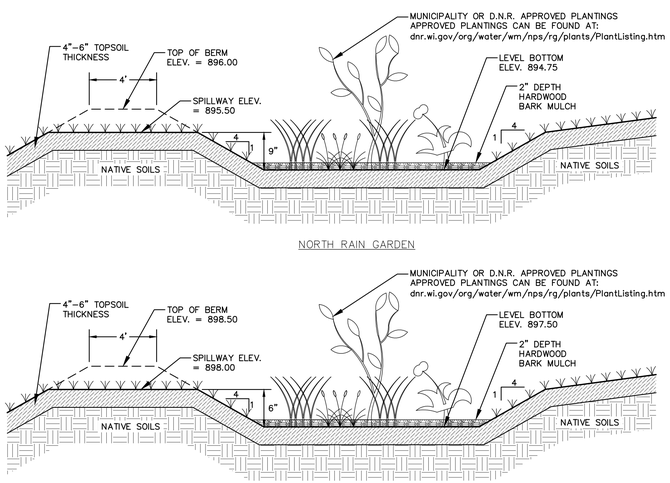

GENERAL NOTES:

1. RAIN GARDEN SHALL BE CONSTRUCTED IN ACCORDANCE WITH WDNR TECHNICAL STANDARD 1009.
2. CONTRACTOR SHALL AVOID COMPACTION OF RAIN GARDEN AREAS DURING CONSTRUCTION.
3. OWNER MUST CONSULT LANDSCAPE ARCHITECT OR ECOLOGICAL PLANNING AGENCY FOR APPROPRIATE PLANTS AND PLANTING CONFIGURATIONS.

RAIN GARDEN CROSS SECTION

N.T.S.

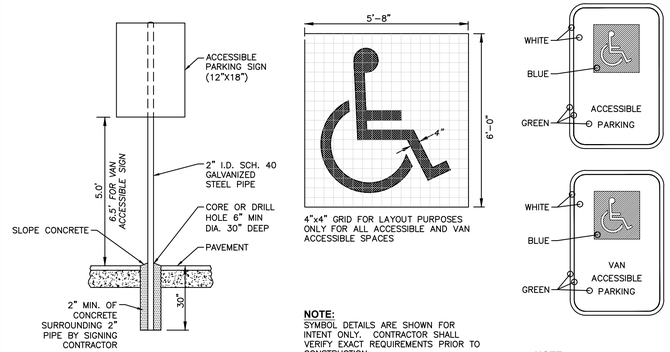

NOTE:
SIGNAGE DETAILS ARE SHOWN FOR INTENT ONLY. CONTRACTOR SHALL VERIFY EXACT REQUIREMENTS PRIOR TO CONSTRUCTION.

ACCESSIBLE PARKING SIGN AND POST INSTALLATION

N.T.S.

NOTE:
SYMBOL DETAILS ARE SHOWN FOR INTENT ONLY. CONTRACTOR SHALL VERIFY EXACT REQUIREMENTS PRIOR TO CONSTRUCTION.

PAINTED SYMBOL

N.T.S.

NOTE:
SIGNAGE AND SYMBOL DETAILS ARE SHOWN FOR INTENT ONLY. CONTRACTOR SHALL VERIFY EXACT REQUIREMENTS PRIOR TO CONSTRUCTION.

SIGN DETAILS

N.T.S.

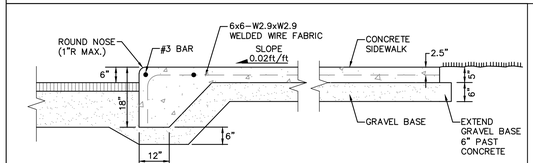

INTEGRAL CONCRETE CURB & WALK

N.T.S.

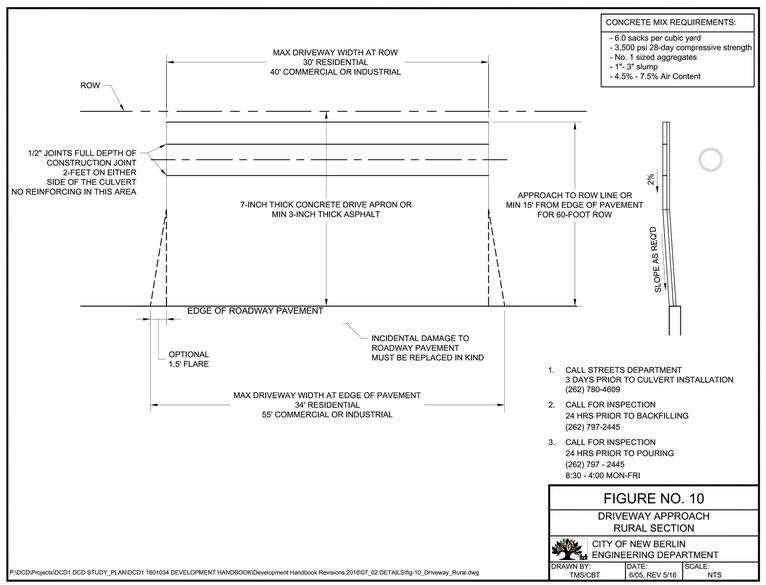

DIGGERS HOTLINE
Toll Free (800) 242-8511

JSD Professional Services, Inc.
Engineers • Surveyors • Planners
CREATE THE VISION TELL THE STORY
MADISON | MILWAUKEE | WAUSAU
APPLETON | KENOSHA | CHICAGO
COEUR D'ALENE
MILWAUKEE REGIONAL OFFICE
W238 N1610 BUSSE ROAD, SUITE 100
WAUKESHA, WISCONSIN 53188
P. 262.513.0666

CLIENT:
PROPERTY REVISION REALTY / CONSTRUCTION / DESIGN

CLIENT ADDRESS:
3049 WEST BRIDGE STREET
GREENFIELD, WI 53221

PROJECT:
17400 WEST NATIONAL AVENUE

PROJECT LOCATION:
17400 WEST NATIONAL AVENUE
NEW BERLIN, WI 53146

PLAN MODIFICATIONS:

#	Date:	Description:
1	7/17/2020	INITIAL CITY SUBMITTAL
2	11/30/2020	REVISED CITY SUBMITTAL
3	12/24/2020	REVISED CITY SUBMITTAL
4		
5		
6		
7		
8		
9		
10		
11		
12		
13		
14		
15		

Design/Drawn: APM
Approved: TJB
Date: 7/17/2020

SHEET TITLE:
DETAILS

SHEET NUMBER:
C4.0

JSD PROJECT NO: 20-9753

THESE PLANS AND DESIGNS ARE COPYRIGHT PROTECTED AND MAY NOT BE USED IN WHOLE OR IN PART WITHOUT THE WRITTEN CONSENT OF JSD PROFESSIONAL SERVICES, INC.

File: R:\2020\20975\5\DWG\Civil Sheets\20-9753 C4.0 - Details.dwg Layout: C4.0 User: jsimon Plotted: Dec 30, 2020 - 11:11am Xref's:

REV. 12–06–2018

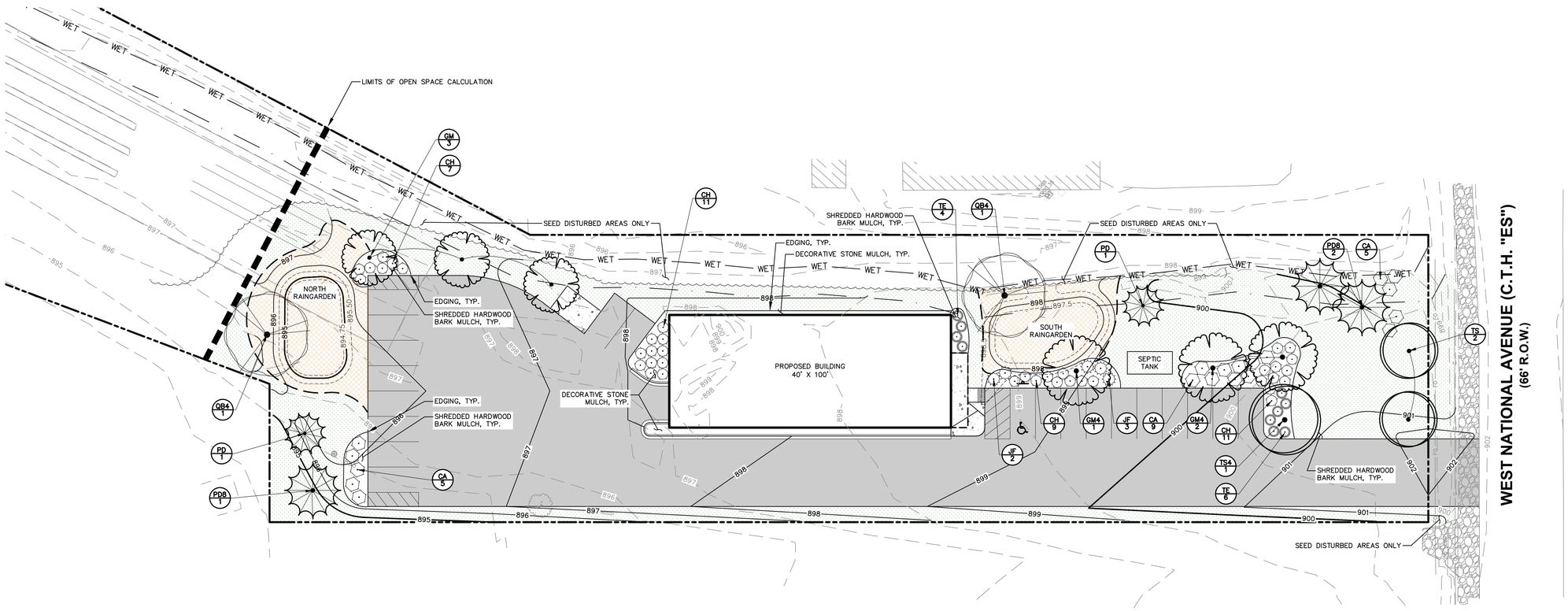

PLANT SCHEDULE

Ø1–DECIDUOUS TREES	CODE	BOTANICAL / COMMON NAME	CONT	SIZE	QTY
	GM	Ginkgo biloba 'Magyar' / Magyar Ginkgo	B & B	2"Cal	3
	GM4	Ginkgo biloba 'Magyar' / Magyar Ginkgo	B & B	4"Cal	3
	QB4	Quercus bicolor / Swamp White Oak	B & B	4"Cal	2
	TS	Tilia americana 'Sentry' / American Linden	B & B	2"Cal	2
	TS4	Tilia americana 'Sentry' / American Linden	B & B	4"Cal	1
Ø2–EVERGREEN TREES	CODE	BOTANICAL / COMMON NAME	CONT	SIZE	QTY
	PD	Picea glauca 'Densata' / Black Hills Spruce	B & B	Min. 6 ft tall	2
	PD8	Picea glauca 'Densata' / Black Hills Spruce	B & B	Min. 8 ft tall	3
Ø4–DECIDUOUS SHRUBS	CODE	BOTANICAL / COMMON NAME	CONT	SIZE	QTY
	CH	Clethra alnifolia 'Hummingbird' / Hummingbird Summersweet	5 gal		36
	CA	Cornus sericea 'Alleman's Compact' / Dwarf Red Twig Dogwood	5 gal		19
Ø5–EVERGREEN SHRUBS	CODE	BOTANICAL / COMMON NAME	CONT	SIZE	QTY
	JF	Juniperus chinensis 'Sea Green' / Sea Green Juniper	5 gal		8
	TE	Taxus x media 'Everlow' / Everlow Yew	5 gal		10

MUNICIPAL LANDSCAPE REQUIREMENTS

POINT REQUIREMENT 1: Open Space

23,087 SF Open Space

Calculation: 1 Tree and 3 Shrubs per 3,600 SF Open space
Tree Calculation Formula: (23,087 SF Open Space / 3,600 SF) = 6.4
Shrub Calculation Formula: (23,087 SF Open Space / 3,600 SF) x 3 Shrubs = 19.2
Total Points Required: **7 Trees and 20 Shrubs**

Trees

Species: Scientific Name	Species: Common Name	Quantity
Quercus bicolor	Swamp White Oak	2
Tilia americana `Sentry`	American Linden	2
Picea glauca `Densata`	Black Hills Spruce	3
		7

Shrubs

Species: Scientific Name	Species: Common Name	Quantity
Clethra alnifolia `Hummingbird`	Hummingbird Summersweet	11
Cornus sericea `Alleman's Compact`	Dwarf Red Twig Dogwood	5
Taxus x media `Everlow`	Everlow Yew	4
		20

POINT REQUIREMENT 2a: Parking Lot Perimeter (Side Lot Line)

235 LF Parking Lot Perimeter

Calculation: 1 Tree per 30 LF and 1 Shrub per 5 LF
Tree Calculation Formula: (235 LF / 30 LF) = 7.8
Shrub Calculation Formula: (235 LF / 5 LF) = 47
Total Points Required: **8 Trees and 47 Shrubs**

Trees

Species: Scientific Name	Species: Common Name	Quantity
Ginkgo biloba `Magyar`	Magyar Ginkgo	6
Picea glauca `Densata`	Black Hills Spruce	2
		8

Shrubs

Species: Scientific Name	Species: Common Name	Quantity
Clethra alnifolia `Hummingbird`	Hummingbird Summersweet	25
Cornus sericea `Alleman's Compact`	Dwarf Red Twig Dogwood	14
Juniperus chinensis `Sea Green`	Sea Green Juniper	8
		47

POINT REQUIREMENT 2b: Parking Lot Perimeter (Arterial Street)

18 LF Parking Lot Perimeter

Calculation: 1 Tree per 20 LF and 1 Shrub per 5 LF
Tree Calculation Formula: (18 LF / 20 LF) = .9
Shrub Calculation Formula: (18 LF / 5 LF) = 3.6
Total Points Required: **1 Tree and 4 Shrubs**

Trees

Species: Scientific Name	Species: Common Name	Quantity
Tilia americana `Sentry`	American Linden	1
		1

Shrubs

Species: Scientific Name	Species: Common Name	Quantity
Taxus x media `Everlow`	Everlow Yew	6
		6

GENERAL NOTES

1. REFER TO THE EXISTING CONDITIONS SURVEY FOR EXISTING CONDITIONS NOTES AND LEGEND.
2. ALL WORK IN THE ROW SHALL BE IN ACCORDANCE WITH THE MUNICIPAL STANDARD SPECIFICATIONS FOR PUBLIC WORKS CONSTRUCTION.
3. JSD SHALL BE HELD HARMLESS AND DOES NOT WARRANT ANY DEVIATIONS BY THE OWNER/CONTRACTOR FROM THE APPROVED CONSTRUCTION PLANS THAT MAY RESULT IN DISCIPLINARY ACTIONS BY ANY OR ALL REGULATORY AGENCIES.
4. DRAWING FOR REVIEW – NOT FOR CONSTRUCTION UNLESS OTHERWISE NOTED IN THE TITLE BLOCK.
5. THE LANDSCAPE CONTRACTOR SHALL COORDINATE ALL FINE GRADING AND TOPSOILING WITH GENERAL CONTRACTOR
6. REFER TO "LANDSCAPE DETAILS AND NOTES" SHEET FOR ADDITIONAL DETAILS, NOTES AND SPECIFICATION INFORMATION INCLUDING MATERIALS, GUARANTEE AND EXECUTION RELATED TO LANDSCAPE PLAN
7. CONTRACTOR SHALL REVIEW SITE CONDITIONS FOR UTILITY CONFLICTS, DRAINAGE ISSUES, SUBSURFACE ROCK, AND PLANT PLACEMENT CONFLICTS PRIOR TO PLANT INSTALLATION. REPORT ANY CONDITIONS THAT MAY HAVE ADVERSE IMPACT ON PLANTING OPERATIONS TO LANDSCAPE ARCHITECT
8. DO NOT COMMENCE PLANTING OPERATIONS UNTIL ALL ADJACENT SITE IMPROVEMENTS, IRRIGATION INSTALLATION, AND FINISH GRADING ARE COMPLETE

LEGEND

- PROPERTY LINE
- EASEMENT LINE
- BUILDING OUTLINE
- BUILDING OVERHANG
- EDGE OF PAVEMENT
- STANDARD CURB AND GUTTER
- ASPHALT PAVEMENT
- CONCRETE PAVEMENT
- 959 — PROPOSED 1 FOOT CONTOUR
- 960 — PROPOSED 5 FOOT CONTOUR
- 959 — EXISTING 1 FOOT CONTOUR
- 960 — EXISTING 5 FOOT CONTOUR
- POLYETHYLENE EDGING
- SEEDING LIMITS
- SEED MIX – RAINWATER RENEWAL
- SEED MIX – TURFGRASS

north

SCALE IN FEET
20' 0 20'

JSD Professional Services, Inc.
Engineers • Surveyors • Planners

CREATE THE VISION TELL THE STORY

MADISON | MILWAUKEE | WAUSAU
APPLETON | KENOSHA | CHICAGO
COEUR D'ALENE

MILWAUKEE REGIONAL OFFICE
W238 N1610 BUSSE ROAD, SUITE 100
WAUKESHA, WISCONSIN 53188
P. 262.513.0666

CLIENT:
PROPERTY REVISION
REALTY / CONSTRUCTION / DESIGN

CLIENT ADDRESS:
3049 WEST BRIDGE STREET
GREENFIELD, WI 53221

PROJECT:
17400 WEST NATIONAL AVENUE

PROJECT LOCATION:
17400 WEST NATIONAL AVENUE
NEW BERLIN, WI 53146

PLAN MODIFICATIONS:

#	Date:	Description:
1	7/17/2020	INITIAL CITY SUBMITTAL
2	11/30/2020	REVISED CITY SUBMITTAL
3	12/24/2020	REVISED CITY SUBMITTAL
4		
5		
6		
7		
8		
9		
10		
11		
12		
13		
14		
15		

Design/Drawn: MWS
Approved: TJB
Date: 7/17/2020

SHEET TITLE:
LANDSCAPE PLAN

SHEET NUMBER:
L1.0

JSD PROJECT NO: 20-9753

THESE PLANS AND DESIGNS ARE COPYRIGHT PROTECTED AND MAY NOT BE USED IN WHOLE OR IN PART WITHOUT THE WRITTEN CONSENT OF JSD PROFESSIONAL SERVICES, INC.

File: K:\2020\209753\DWG\Landscape Sheets\209753 Landscape Plan.dwg Layout: L1.0 User: mainscalch Plotted: Dec 30, 2020 - 2:29pm Xref's: 209753 17400 W National Ave - New Berlin

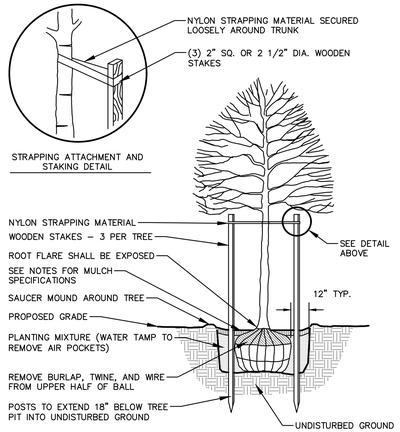

NOTE:
1. DIG HOLE NO DEEPER THAN BASE OF ROOT BALL TO FLARE. ROOT BALL TO BE SET ON UNDISTURBED SOIL UNLESS COMPACTED AGGREGATE STONE REMAINS FROM SITE EXCAVATOR. REMOVE REMAINING AGGREGATE STONE UNTIL SOIL LAYER IS REACHED
2. REMOVE NYLON STRAPPING WITHIN 9–18 MONTHS FOLLOWING INSTALLATION

DECIDUOUS TREE PLANTING DETAIL

N.T.S.

REV. 01–04–2019

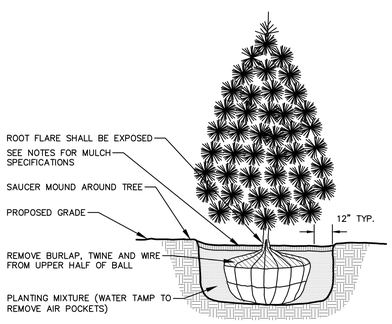

NOTE:
1. DIG HOLE NO DEEPER THAN BASE OF ROOT BALL TO FLARE. ROOT BALL TO BE SET ON UNDISTURBED SOIL UNLESS COMPACTED AGGREGATE STONE REMAINS FROM SITE EXCAVATOR. REMOVE REMAINING AGGREGATE STONE UNTIL SOIL LAYER IS REACHED

EVERGREEN TREE PLANTING DETAIL

N.T.S.

REV. 01–03–2019

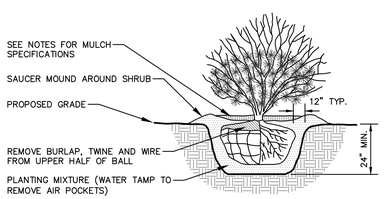

NOTE:
1. ROOT FLARE TO BE EXPOSED.

SHRUB PLANTING DETAIL

N.T.S.

REV. 01–03–2019

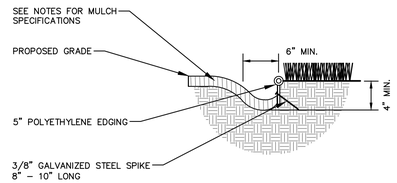

POLYETHYLENE LANDSCAPE EDGING DETAIL

N.T.S.

REV. 01–03–2019

GENERAL NOTES

1. GENERAL: ALL WORK IN THE R–O–W AND PUBLIC EASEMENTS SHALL BE IN ACCORDANCE WITH LOCAL MUNICIPAL REQUIREMENTS. JSD SHALL BE HELD HARMLESS AND DOES NOT WARRANT ANY DEVIATIONS BY THE OWNER/CONTRACTOR FROM THE APPROVED CONSTRUCTION PLANS THAT MAY RESULT IN DISCIPLINARY ACTIONS BY ANY OR ALL REGULATORY AGENCIES. LOCATE ALL UTILITIES PRIOR TO CONSTRUCTION. THE CONTRACTOR IS RESPONSIBLE FOR REPAIRING ANY DAMAGE DONE TO UTILITIES. CONTRACTOR MUST CALL 1–800–242–8511 FOR UTILITY LOCATIONS AT LEAST THREE DAYS PRIOR TO DIGGING. HAND DIG AND INSTALL ALL PLANTS THAT ARE NEAR EXISTING UTILITIES. PROTECT PREVIOUSLY INSTALLED WORK OF OTHER TRADES. CONTRACTOR IS RESPONSIBLE FOR STAKING THE PLANT MATERIALS FOR REVIEW BY OWNER PRIOR TO DIGGING AND PLACEMENT AND SHALL COORDINATE ALL FINE GRADING AND RESTORATION WITH THE GRADING CONTRACTOR.

2. DELIVERY AND HANDLING: DO NOT DELIVER MORE PLANT MATERIALS THAN CAN BE PLANTED IN ONE DAY, UNLESS ADEQUATE, APPROPRIATE AND SECURE STORAGE IS PROVIDED AND APPROVED BY OWNER'S REPRESENTATIVE. AT ALL TIMES, PROTECT ALL PLANT MATERIALS FROM WIND AND DIRECT SUN. DELIVER PLANTS WITH LEGIBLE IDENTIFICATION LABELS. PROTECT PLANTS DURING DELIVERY AND DO NOT PRUNE PRIOR TO DELIVERY. ALL TREES AND SHRUBS SHALL BE PLANTED ON THE DAY OF DELIVERY; IF THIS IS NOT POSSIBLE, PROTECT THE PLANT MATERIALS NOT PLANTED BY STORING THEM IN A SHADED, SECURE AREA, PROTECTING THE ROOT MASS WITH WET SOIL, MULCH, HAY OR OTHER SUITABLE MEDIUM. CONTRACTOR TO KEEP ALL PLANT MATERIALS ADEQUATELY WATERED TO PREVENT ROOT DESICCATION. DO NOT REMOVE CONTAINER GROWN STOCK FROM CONTAINERS BEFORE TIME OF PLANTING. DO NOT PICK UP CONTAINER OR BALLED PLANTS BY STEM OR ROOTS. ALL PLANTS SHALL BE LIFTED AND HANDLED FROM THE BOTTOM OF THE CONTAINER OR BALL. PERFORM ACTUAL PLANTING ONLY WHEN WEATHER AND SOIL CONDITIONS ARE SUITABLE IN ACCORDANCE WITH LOCALLY ACCEPTED BEST HORTICULTURAL PRACTICES.

3. MATERIALS – PLANTS: ALL PLANTS SHALL CONFORM TO THE LATEST VERSION OF THE AMERICAN STANDARD FOR NURSERY STOCK ANSI Z60.1. PLANTS SHALL BE TRUE TO SPECIES AND VARIETY SPECIFIED AND NURSERY GROWN IN ACCORDANCE WITH GOOD HORTICULTURAL PRACTICES UNDER CLIMATIC CONDITIONS SIMILAR TO THOSE IN THE LOCALITY OF THE PROJECT FOR AT LEAST 2 YEARS. PLANTS SHALL BE FRESHLY DUG (DURING THE MOST RECENT FAVORABLE HARVEST SEASON). PLANTS SHALL BE SO TRAINED IN DEVELOPMENT AND APPEARANCE AS TO BE UNQUESTIONABLY SUPERIOR IN FORM, COMPACTNESS, AND SYMMETRY. PLANTS SHALL BE SOUND, HEALTHY, VIGOROUS, WELL BRANCHED AND DENSELY FOLIATED WHEN IN LEAF, AND FREE OF DISEASE AND INSECTS (ADULT EGGS, PUPAE OR LARVAE). THEY SHALL HAVE HEALTHY, WELL–DEVELOPED ROOT SYSTEMS AND SHALL BE FREE FROM PHYSICAL DAMAGE OR OTHER CONDITIONS THAT WOULD PREVENT THRIVING GROWTH OR PREMATURE MORTALITY. PLANTS SHALL BE OF THE HIGHEST QUALITY, POSSESS TYPICAL GROWTH HABITS AND FORM FOR THEIR SPECIES AND BE FREE OF INJURY. PARKWAY TREES AND PARKING LOT TREES SHALL HAVE A MINIMUM BRANCHING HEIGHT OF SIX (6) FEET ABOVE THE GROUND TO ALLOW ADEQUATE VISUAL AND PHYSICAL CLEARANCE.

4. PRUNING: THE CONTRACTOR SHALL PRUNE ALL TREES AND REPAIR ANY INJURIES THAT OCCURRED DURING THE PLANTING PROCESS. DOUBLE LEADERS, DEAD BRANCHES, AND LIMBS DAMAGED OR BROKEN DURING THE PLANTING PROCESS, SHALL BE PRUNED. THIS SHALL BE THE ONLY PRUNING ALLOWED AT PLANTING. PRUNING SHALL CONFORM TO THE LATEST VERSION OF THE AMERICAN STANDARD FOR TREE CARE OPERATIONS, ANSI A300. PRUNE TREES IN ACCORDANCE WITH NAA GUIDELINES. DO NOT TOP TREES. PRUNE SHRUBS ACCORDING TO STANDARD HORTICULTURAL PRACTICES. ON CUTS OVER 3/4" IN DIAMETER AND BRUISES OR SCARS ON BARK, TRACE THE INJURED CAMBIUM LAYER BACK TO LIVING TISSUE AND REMOVE. SMOOTH AND SHAPE WOUNDS SO AS NOT TO RETAIN WATER. TREAT THE AREA WITH AN APPROVED INCONSPICUOUS LATEX BASED ANTISEPTIC TREE PAINT, IF PRUNING OCCURS "IN SEASON". DO NOT PRUNE ANY OAK TREES DURING THE MONTHS FROM APRIL TO OCTOBER.

5. CLEANUP: THE WORK AREA SHALL BE KEPT SAFE AND NEAT AT ALL TIMES. DISPOSED OF EXCESS SOIL. REMOVE ALL CUTTINGS AND WASTE MATERIALS. SOIL AND BRANCHES. BIND AND WRAP THESE MATERIALS, ANY REJECTED PLANTS, AND ANY OTHER DEBRIS RESULTING FROM ALL PLANTING TASKS AND PROMPTLY CLEAN UP AND REMOVE FROM THE PROJECT SITE. UNDER NO CIRCUMSTANCES SHALL THE ACCUMULATION OF SOIL, BRANCHES OR OTHER DEBRIS BE ALLOWED UPON A PUBLIC PROPERTY IN SUCH A MANNER AS TO RESULT IN A PUBLIC SAFETY HAZARD OR DAMAGE. LIKEWISE, UNDER NO CIRCUMSTANCES SHALL ANY DEBRIS OR INCIDENTAL MATERIALS BE ALLOWED UPON ADJACENT PRIVATE PROPERTY.

6. ANY SUBSTITUTIONS IN PLANT TYPE, LOCATION, OR SIZE SHALL BE APPROVED BY LANDSCAPE ARCHITECT PRIOR TO INSTALLATION.

7. CONTRACTOR TO VERIFY PLANT MATERIAL QUANTITIES AND SQUARE FOOTAGES. QUANTITIES SHOWN ON PLAN TAKE PRECEDENCE OVER THOSE ON SCHEDULE.

LANDSCAPE MATERIAL NOTES

1. MATERIALS – PLANTING MIXTURE: ALL HOLES EXCAVATED FOR TREES, SHRUBS, PERENNIALS AND ORNAMENTAL GRASSES SHALL BE BACKFILLED WITH TWO (2) PARTS TOPSOIL, ONE (1) PART SAND AND ONE (1) PART COMPOST. SOIL MIXTURE SHALL BE WELL BLENDED PRIOR TO INSTALLATION.

2. MATERIALS – TOPSOIL: TOPSOIL TO BE CLEAN, FRIABLE LOAM FROM A LOCAL SOURCE, FREE FROM STONES OR DEBRIS OVER 3/4" IN DIAMETER, AND FREE FROM TOXINS OR OTHER DELETERIOUS MATERIALS. TOPSOIL SHALL HAVE A pH VALUE BETWEEN 6 AND 7. TOPSOIL AND PLANTING SOIL SHALL BE TESTED TO ENSURE CONFORMANCE WITH THESE SPECIFICATIONS AND SHALL BE AMENDED TO MEET THESE SPECIFICATIONS. PROVIDE TEST RESULTS TO OWNER'S REPRESENTATIVE PRIOR TO PLACEMENT. DO NOT PLACE FROZEN OR MUDDY TOPSOIL. APPLY SOIL AMENDMENTS TO ALL LANDSCAPE AREAS PER SOIL TEST.

3. MATERIALS – SHREDDED HARDWOOD BARK MULCH: ALL PLANTING AREAS LABELED ON PLAN SHALL RECEIVE CERTIFIED WEED FREE SHREDDED HARDWOOD BARK MULCH INSTALLED TO A MINIMUM AND CONSISTENT DEPTH OF 3–INCHES. SHREDDED HARDWOOD BARK MULCH SIZE & COLOR TO BE APPROVED BY OWNER'S REPRESENTATIVE PRIOR TO INSTALLATION. FERTILIZER SHALL BE IN ACCORDANCE WITH APPLICABLE LOCAL, COUNTY AND STATE REQUIREMENTS. SHREDDED HARDWOOD BARK MULCH AREAS SHALL NOT RECEIVE WOVEN WEED BARRIER FABRIC.

4. MATERIALS – DECORATIVE STONE MULCH: ALL PLANTING AREAS LABELED ON PLAN SHALL RECEIVE DECORATIVE STONE MULCH SPREAD TO A MINIMUM AND CONSISTENT DEPTH OF 3–INCHES. DECORATIVE STONE MULCH TYPE, SIZE & COLOR TO BE APPROVED BY OWNER'S REPRESENTATIVE PRIOR TO INSTALLATION. FERTILIZER SHALL BE IN ACCORDANCE WITH APPLICABLE LOCAL, COUNTY AND STATE REQUIREMENTS. STONE MULCH AREAS SHALL RECEIVE WOVEN WEED BARRIER FABRIC. NO PLASTIC/IMPERVIOUS BARRIERS WILL BE PERMITTED. EXAMPLE: BLACK VISQUEEN.

5. MATERIALS – TREE & SHRUB RINGS: ALL TREES AND/OR SHRUBS PLANTED IN SEEDED LAWN AREAS TO BE INSTALLED WITH A MINIMUM 5' DIAMETER SHREDDED HARDWOOD BARK MULCH TREE RING SPREAD TO A CONSISTENT DEPTH OF 3–INCHES. ALL TREE RINGS SHOULD BE INSTALLED WITH A 5" DEPTH SHOVEL CUT EDGE, ANGLED 45 DEGREES INTO SOIL AT A 5' DIAMETER ABOUT THE CENTER OF THE TREE PLANTING. A PRE–EMERGENT GRANULAR HERBICIDE WEED–PREVENTER SHOULD BE MIXED WITH MULCH USED TO INSTALL TREE RING AS WELL AS TOPICALLY APPLIED TO COMPLETED INSTALLATION OF TREE RING.

6. MATERIALS – POLYETHYLENE EDGING: EDGING SHALL BE 5" DEEP, POLYETHYLENE EDGING. OWNER'S REPRESENTATIVE SHALL APPROVE PRODUCT SPECIFICATION PROVIDED BY LANDSCAPE CONTRACTOR.

7. MATERIALS – TREE PROTECTION: ALL TREES TO BE INSTALLED WITH LDPE TREE GUARDS AS MANUFACTURED BY A.M. LEONARD HORTICULTURAL TOOL & SUPPLY CO., OR APPROVED EQUAL.

SEEDING NOTES

1. MATERIALS – TURFGRASS SEED MIX: DISTURBED LAWN AREAS LABELED ON PLAN AS SUCH, SHALL RECEIVE 6" OF TOPSOIL AND EARTH CARPET'S "MADISON PARKS" GRASS SEED, OR EQUIVALENT AS APPROVED BY THE OWNER'S REPRESENTATIVE, INSTALLED PER MANUFACTURER'S RECOMMENDATIONS. IN ADDITION TO TURFGRASS SEED, ANNUAL RYE SHALL BE APPLIED TO ALL DISTURBED AREAS AT A RATE OF 1 1/2 LBS PER 1000 SQUARE FEET. FERTILIZE AND MULCH PER MANUFACTURER'S RECOMMENDATIONS. MULCH SHALL BE CERTIFIED NOXIOUS WEED SEED–FREE.

2. MATERIALS – RAINWATER RENEWAL SEED MIX: DISTURBED LAWN AREAS LABELED ON PLAN AS SUCH, SHALL BE BROADCAST SEEDED WITH "RAINWATER RENEWAL" SEED MIX, AS PROVIDED BY AGRECOL, LLC., 10101 N. CASEY RD, EVANSVILLE, WISCONSIN, 53536, TEL. 608–223–3571 (OR APPROVED EQUIVALENT). INSTALL SEED WITH SUPPLEMENTAL MATERIALS AND AMENDMENTS AS RECOMMENDED BY SEED SUPPLIER AND AT RATES AND OPTIMUM TIMES OF THE YEAR AS RECOMMENDED BY THE SEED SUPPLIER TO ENSURE SUCCESSFUL GERMINATION AND SEED/ROOT ZONE GROWTH DEVELOPMENT. REFER TO PRODUCT SPECIFICATIONS AND MANUFACTURERS RECOMMENDATIONS FOR INSTALLATION.

CONTRACTOR AND OWNER RESPONSIBILITY NOTES

1. **GUARANTEE: THE CONTRACTOR SHALL GUARANTEE ALL PLANTS THROUGH ONE (1) YEAR AFTER ACCEPTANCE BY THE OWNER'S REPRESENTATIVE. PLANTS SHALL BE ALIVE AND IN HEALTHY AND FLOURISHING CONDITION AT THE END OF THE GUARANTEE PERIOD. THE CONTRACTOR SHALL REPLACE (AT NO COST TO OWNER) ANY PLANTS THAT ARE DEAD OR NOT IN A VIGOROUS THRIVING CONDITION. REPLACEMENT PLANTS SHALL BE OF THE SAME KIND AND SIZE AS ORIGINALLY SPECIFIED UNLESS OTHERWISE DIRECTED BY OWNER'S REPRESENTATIVE. RESTORE BEDS AS NECESSARY FOLLOWING PLANT REPLACEMENT, INCLUDING BUT NOT LIMITED TO BEDDING, EDGING, MULCH, ETC. REPLACE PLANTS DAMAGED AT TIME OF PLANTING. REPAIR AREAS DISTURBED IN ANY WAY DURING PLANT REPLACEMENT AT NO COST TO OWNER. CONTRACTOR SHALL PROVIDE A ONE (1)–YEAR STRAIGHTENING GUARANTEE FOR ALL TREES.**

2. **CONTRACTOR IS RESPONSIBLE FOR STAKING THE PLANT MATERIALS FOR REVIEW BY OWNER'S REPRESENTATIVE PRIOR TO DIGGING AND PLACEMENT AND SHALL COORDINATE ALL FINE GRADING AND RESTORATION WITH THE GRADING CONTRACTOR.**

3. **MAINTENANCE: (CONTRACTOR) FOR ALL PLANTINGS AND SEEDED LAWN AREAS: THE CONTRACTOR SHALL MAINTAIN ALL PLANTINGS AND LAWN AREAS FOR A MINIMUM TIME PERIOD OF 60 DAYS, UNTIL FINAL ACCEPTANCE BY OWNER'S REPRESENTATIVE. THE CONTRACTOR IS RESPONSIBLE FOR ADEQUATELY WATERING PLANTS AND LAWN/TURFGRASS DURING THIS 60 DAY ESTABLISHMENT PERIOD. CONTRACTOR IS RESPONSIBLE FOR THE ESTABLISHMENT OF HEALTHY VIGOROUS PLANT MATERIALS AND LAWN/TURFGRASS GROWTH. CONTRACTOR IS ALSO RESPONSIBLE FOR ANY PRUNING OF PLANT MATERIALS, AND SHAPING AND/OR REPLACEMENT OR SUPPLEMENT OF DEFICIENT SHREDDED HARDWOOD BARK MULCH DURING THIS PERIOD. LONG TERM PLANT MATERIALS AND LAWN/TURFGRASS MAINTENANCE AND ANY PROGRAM FOR SUCH IS THE RESPONSIBILITY OF THE OWNER. ALL PLANTINGS AND LAWN/TURFGRASS AREAS SHALL BE MAINTAINED IN A MANICURED CONDITION UNTIL THE TIME WHEN THE OWNER'S ACCEPTANCE IS GIVEN.**

4. **MAINTENANCE: (OWNER) THE OWNER IS RESPONSIBLE FOR THE CONTINUED MAINTENANCE, REPAIR AND REPLACEMENT OF ALL LANDSCAPING MATERIALS AND WEED BARRIER FABRIC AS NECESSARY FOLLOWING THE ONE (1) YEAR CONTRACTOR GUARANTEE PERIOD.**

JSD Professional Services, Inc.
Engineers • Surveyors • Planners

CREATE THE VISION TELL THE STORY

MADISON | MILWAUKEE | WAUSAU
APPLETON | KENOSHA | CHICAGO
COEUR D'ALENE

MILWAUKEE REGIONAL OFFICE
W238 N1610 BUSSE ROAD, SUITE 100
WAUKESHA, WISCONSIN 53188
P. 262.513.0666

CLIENT:
PROPERTY REVISION
REALTY / CONSTRUCTION / DESIGN

CLIENT ADDRESS:
3049 WEST BRIDGE STREET
GREENFIELD, WI 53221

PROJECT:
17400 WEST NATIONAL AVENUE

PROJECT LOCATION:
17400 WEST NATIONAL AVENUE
NEW BERLIN, WI 53146

PLAN MODIFICATIONS:

#	Date:	Description:
1	7/17/2020	INITIAL CITY SUBMITTAL
2	11/30/2020	REVISED CITY SUBMITTAL
3	12/24/2020	REVISED CITY SUBMITTAL
4		
5		
6		
7		
8		
9		
10		
11		
12		
13		
14		
15		

Design/Drawn: MWS
Approved: TJB
Date: 7/17/2020

SHEET TITLE:
LANDSCAPE DETAILS AND NOTES

SHEET NUMBER:
L2.0

JSD PROJECT NO: 20-9753

THESE PLANS AND DESIGNS ARE COPYRIGHT PROTECTED AND MAY NOT BE USED IN WHOLE OR IN PART WITHOUT THE WRITTEN CONSENT OF JSD PROFESSIONAL SERVICES, INC.

File: K:\2020\209753\DWG\Landscape Sheets\209753 Landscape Plan.dwg Layout: L2.0 User: mainiscalchi Plotted: Dec 30, 2020 - 2:39pm Xref's: 209753 17400 W National Ave - New Berlin

17400 W. National Ave. – Parking Exhibit

Kelly,

During the August 31st, 2020 Plan Commission meeting a member of the committee indicated that there is reference in the rural commercial development guidelines that parking is preferred behind the proposed front building in our development. It was requested that we provide an exhibit to demonstrate what impact moving the parking to the rear of the building in our proposed development would have. This document demonstrates those impacts along with the reasons we prefer to move forward with the original site layout with a portion of the parking in front of the building.

The biggest impact to the proposed development if the all of the parking were moved to the rear of the building would be a reduced size / width of the front building. The wetland setbacks on the East side of the lot dictate the maximum width of the building, and pushing the building forward reduces the maximum building width from 40 ft to 32 ft. The smaller width not only reduces the area of the building, but also the functionality. The maintenance garage and office space become much less functional and the versatility of the building is greatly reduced.

A survey of the parking configuration at the adjacent buildings along National Avenue was also completed and is included in Appendix C. The table below shows the breakdown of parking in front of, on the side of, and behind those buildings.

#	Address	Business Name	Front of Building	Side of Building	Behind Building
1	17390 W. National	Preferred Cleaning Service	75%	25%	0%
Proposed	**17400 W. National**	**Property ReVision**	**46%**	**0%**	**54%**
2	17600 W. National	Apple Ridge Academy	100%	0%	0%
3	17640 W. National	Unknown	40%	47%	13%
4	17770 W. National	Demski Electric	0%	100%	0%

The survey demonstrates that having parking available in the front of the building is typical among similar buildings and that our proposed site layout includes a higher percentage of parking behind the building than any of the adjacent properties.

It would also be atypical for an office building to force guests to park in the rear of a building and then walk back around to the front to access the main office area. This configuration would make the building much less desirable to purchase or lease in the future and therefore reduce its value.

For the reasons listed in this document, it is our preference to move forward with the original site layout shown in Appendix A. The exhibit demonstrating the impacts of moving all of the parking to the rear of the building shown in Appendix B and is provided for information only. We have no intention of moving forward with the development on the site if forced to move all parking to the rear. The smaller building size and function would not meet the needs of our company and the reduction in value of the buildings would result in the project being no longer economically feasible.

Justin Bohler
President
Property ReVision LLC

Appendix A

Proposed Site Plan

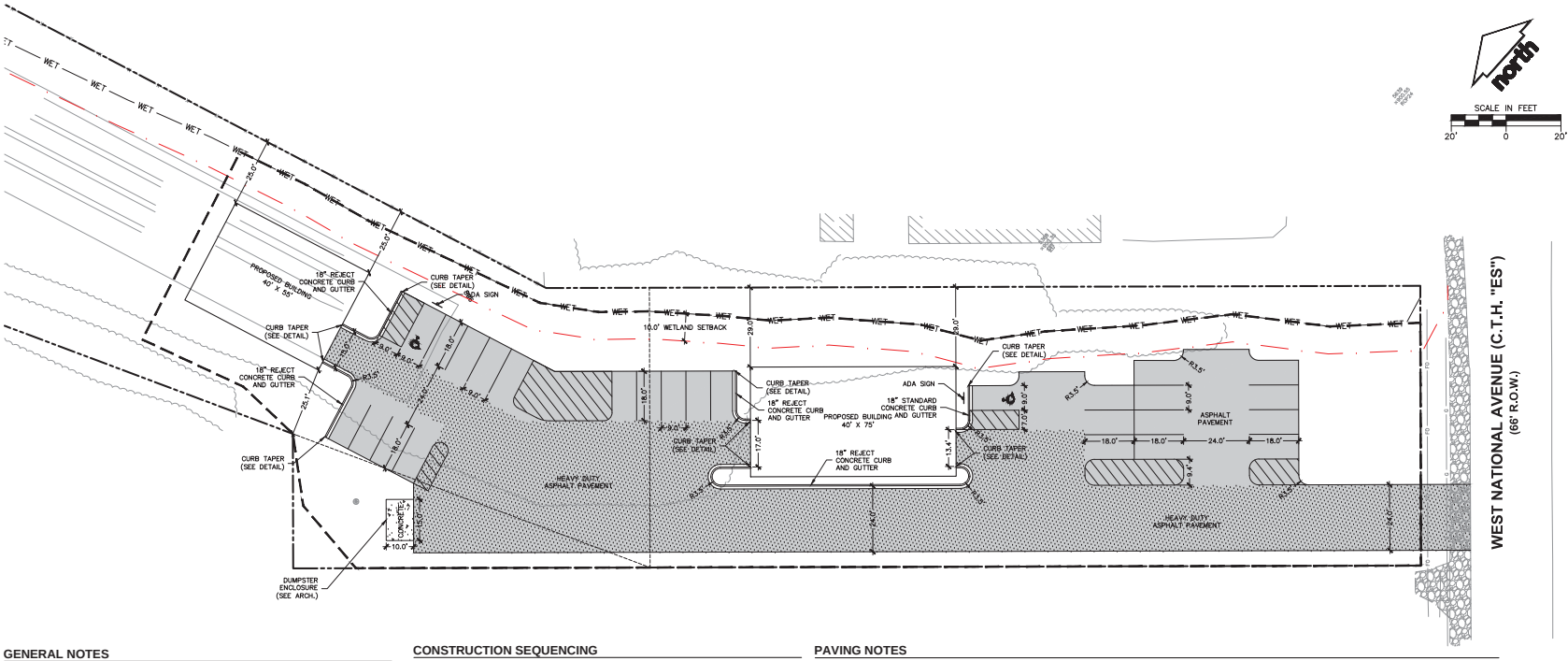

GENERAL NOTES

1. REFER TO THE EXISTING CONDITIONS PLAN FOR EXISTING CONDITIONS NOTES AND LEGENDS.
2. ALL WORK IN THE ROW AND/OR PUBLIC EASEMENTS SHALL BE IN ACCORDANCE WITH THE STANDARD SPECIFICATIONS FOR SEWER & WATER CONSTRUCTION IN WISCONSIN AND MUNICIPAL REQUIREMENTS.
3. EXISTING GRADE SPOT ELEVATIONS SHOWN FOR INFORMATIONAL PURPOSES. DURING CONSTRUCTION MATCH EXISTING GRADES AT CONSTRUCTION LIMITS.
4. JSD PROFESSIONAL SERVICES, INC. (JSD) SHALL BE HELD HARMLESS AND DOES NOT WARRANT ANY DEVIATIONS BY THE OWNER/CONTRACTOR FROM THE APPROVED CONSTRUCTION PLANS THAT MAY RESULT IN DISCIPLINARY ACTIONS BY ANY OR ALL REGULATORY AGENCIES.

LEGEND

- PROPERTY LINE
- BUILDING OUTLINE
- EDGE OF PAVEMENT
- CONCRETE CURB AND GUTTER
- STANDARD DUTY ASPHALT PAVEMENT
- HEAVY DUTY ASPHALT PAVEMENT
- CONCRETE PAVEMENT
- SIGN
- DISTURBED AREA LIMITS

SITE DATA TABLE

SITE ADDRESS	17400 W. NATIONAL AVENUE
NUMBER OF PARKING STALLS	26
ACCESSIBLE	2
EXISTING VS. PROPOSED PROPERTY COVERAGE	
EXISTING IMPERVIOUS SURFACE AREA	1,878 SQ. ST.
EXISTING PERVIOUS SURFACE AREA	160,740 SQ. FT.
EXISTING IMPERVIOUS SURFACE AREA RATIO	0.01
PROPOSED IMPERVIOUS SURFACE AREA	30,557 SQ. FT.
PROPOSED PERVIOUS SURFACE AREA	132,061 SQ. FT.
PROPOSED IMPERVIOUS SURFACE AREA RATIO	0.19
TOTAL DISTURBED AREA	42,289 SQUARE FEET

CONSTRUCTION SEQUENCING

1. INSTALL PERIMETER SILT FENCE AND TEMPORARY CONSTRUCTION ENTRANCE.
2. PERFORM DEMOLITION/REMOVE EXISTING PAVEMENT, BUILDING FOUNDATION, AND FEATURES AS IDENTIFIED.
3. STRIP AND STOCKPILE TOPSOIL, INSTALL SILT FENCE AROUND PERIMETER OF STOCKPILE.
4. CONDUCT ROUGH GRADING EFFORTS AND INSTALL CHECK DAMS WITHIN DRAINAGE DITCHES AS NEEDED.
5. COMPLETE FINAL GRADING, INSTALLATION OF GRAVEL BASE COURSES, PLACEMENT OF CURBS, PAVEMENTS, ETC.
6. PLACE TOPSOIL AND IMMEDIATELY STABILIZE DISTURBED AREAS WITH EROSION CONTROL MEASURES AS INDICATED ON PLANS.
7. EROSION CONTROLS SHALL NOT BE REMOVED UNTIL SITE IS FULLY STABILIZED OR 70% VEGETATIVE COVER IS ESTABLISHED.

CONTRACTOR MAY MODIFY SEQUENCING AFTER ITEM NO. 1 AS NEEDED TO COMPLETE CONSTRUCTION IF EROSION CONTROLS ARE MAINTAINED IN ACCORDANCE WITH THE CONSTRUCTION SITE EROSION CONTROL REQUIREMENTS.

UTILITY NOTES

1. ALL EXISTING UTILITIES ARE SHOWN FOR INFORMATIONAL PURPOSES ONLY AND ARE NOT GUARANTEED TO BE ACCURATE OR ALL INCLUSIVE. THE CONTRACTOR IS RESPONSIBLE FOR MAKING HIS OWN DETERMINATION AS TO THE TYPE AND LOCATIONS OF UNDERGROUND UTILITIES AS MAY BE NECESSARY TO AVOID DAMAGE THERETO. CONTRACTOR/OWNER SHALL CALL "DIGGER'S HOTLINE" PRIOR TO ANY CONSTRUCTION.
2. PRIOR TO CONSTRUCTION, THE PRIME CONTRACTOR IS RESPONSIBLE FOR:
   - EXAMINING ALL SITE CONDITIONS RELATIVE TO THE CONDITIONS INDICATED ON THE ENGINEERING DRAWINGS. ANY DISCREPANCIES ARE TO BE REPORTED TO THE ENGINEER AND RESOLVED PRIOR TO THE START OF CONSTRUCTION.
   - OBTAINING ALL PERMITS INCLUDING PERMIT COSTS, TAP FEES, METER DEPOSITS, BONDS, AND ALL OTHER FEES REQUIRED FOR PROPOSED WORK TO OBTAIN OCCUPANCY.
   - VERIFYING ALL ELEVATIONS, LOCATIONS AND SIZES OF SANITARY, WATER AND STORM LATERALS AND CHECKING ALL UTILITY CROSSINGS FOR CONFLICTS. NOTIFY ENGINEER OF ANY DISCREPANCY. NO WORK SHALL BE PERFORMED UNTIL THE DISCREPANCY IS RESOLVED.
   - NOTIFYING ALL UTILITIES PRIOR TO INSTALLATION OF ANY UNDERGROUND IMPROVEMENTS.
   - NOTIFYING THE DESIGN ENGINEER AND MUNICIPALITY 48 HOURS PRIOR TO THE START OF CONSTRUCTION TO ARRANGE FOR APPROPRIATE CONSTRUCTION OBSERVATION.
   - COORDINATING ALL CONSTRUCTION WITH OTHER CONTRACTORS INVOLVED WITH CONSTRUCTION OF THE PROPOSED DEVELOPMENT AND FOR REPORTING ANY ERRORS OR DISCREPANCIES BETWEEN THESE PLANS AND PLANS PREPARED BY OTHERS.
3. ALL UTILITY WORK SHALL BE DONE IN ACCORDANCE WITH THE STANDARD SPECIFICATIONS FOR SEWER AND WATER CONSTRUCTION IN WISCONSIN HEREIN REFERRED TO AS THE STANDARD SPECIFICATIONS AND ALL APPLICABLE STATE AND LOCAL CODES AND SPECIFICATIONS. IT IS THE CONTRACTORS RESPONSIBILITY TO DETERMINE WHICH SPECIFICATIONS AND CODES APPLY, AND TO COORDINATE ALL CONSTRUCTION ACTIVITIES WITH THE APPROPRIATE LOCAL AND STATE AUTHORITIES.
4. SPECIFICATIONS SHALL COMPLY WITH THE CITY OF NEW BERLIN ORDINANCES AND WISCONSIN DEPARTMENT OF SAFETY AND PROFESSIONAL SERVICES DSPS 382.
5. TRACER WIRES SHALL BE INSTALLED AS NECESSARY IN ACCORDANCE WITH 182.0715(2R) OF THE STATE STATUTES AND CITY OF NEW BERLIN REQUIREMENTS.
6. THE PRIME CONTRACTOR IS RESPONSIBLE FOR COORDINATING ALL CONSTRUCTION WITH OTHER CONTRACTORS INVOLVED WITH CONSTRUCTION OF THE PROPOSED DEVELOPMENT AND FOR REPORTING ANY ERRORS OR DISCREPANCIES BETWEEN THESE PLANS AND PLANS PREPARED BY OTHERS.
7. THE CONTRACTOR IS RESPONSIBLE FOR PROVIDING THE ENGINEER WITH AS-BUILT CONDITIONS OF THE DESIGNATED IMPROVEMENTS IN ORDER THAT THE APPROPRIATE DRAWINGS CAN BE PREPARED, IF REQUIRED. ANY CHANGES TO THE DRAWINGS OR ADDITIONAL ITEMS MUST BE REPORTED TO THE ENGINEER AS WORK PROGRESSES.

PAVING NOTES

1. GENERAL
   - 1.1 ALL PAVING SHALL CONFORM TO "STATE OF WISCONSIN STANDARD SPECIFICATIONS FOR HIGHWAY & STRUCTURE CONSTRUCTION, LATEST EDITION, APPLICABLE CITY OF NEW BERLIN ORDINANCES AND THE GEOTECHNICAL REPORT PREPARED BY CGC, INC. DATED JULY 14, 2020.
   - 1.2 FINAL PAVEMENT DESIGN TO BE DETERMINED BY OWNER BASED ON GEOTECHNICAL ENGINEER OF RECORD RECOMMENDATIONS. ALL PAVING SHALL BE PERFORMED IN ACCORDANCE WITH THE GEOTECHNICAL ENGINEER OF RECORD RECOMMENDATIONS AS SPECIFIED IN THE GEOTECHNICAL REPORT.
   - 1.3 THE CITY OF NEW BERLIN AND JSD SHALL BE NOTIFIED 48 HOURS IN ADVANCE OF PERFORMING ANY CONSTRUCTION.
   - 1.4 ALL DIMENSIONS AND RADII ARE REFERENCED TO FACE OF CURB OR EDGE OF PAVEMENT, UNLESS SPECIFIED OTHERWISE.
2. ASPHALTIC CONCRETE PAVING SPECIFICATIONS
   - 2.1 CODES AND STANDARDS – THE PLACING, CONSTRUCTION AND COMPOSITION OF THE ASPHALTIC BASE COURSE AND ASPHALTIC CONCRETE SURFACE COURSE SHALL BE IN ACCORDANCE WITH THE REQUIREMENTS OF SECTIONS 450, 455, 460 AND 465 OF THE STATE OF WISCONSIN STANDARD SPECIFICATIONS FOR HIGHWAY AND STRUCTURE CONSTRUCTION, EDITION OF 2019. HEREAFTER, THIS PUBLICATION WILL BE REFERRED TO AS STATE HIGHWAY SPECIFICATIONS.
   - 2.2 WEATHER LIMITATIONS – APPLY TACK COATS WHEN AMBIENT TEMPERATURE IS ABOVE 50° F (10° C) AND WHEN TEMPERATURE HAS NOT BEEN BELOW 35° F (1° C) FOR 12 HOURS IMMEDIATELY PRIOR TO APPLICATION. DO NOT APPLY WHEN BASE IS WET OR CONTAINS EXCESS OF MOISTURE. CONSTRUCT ASPHALTIC CONCRETE SURFACE COURSE WHEN ATMOSPHERIC TEMPERATURE IS ABOVE 40° F (4° C) AND WHEN BASE IS DRY AND WHEN WEATHER IS NOT RAINY. BASE COURSE MAY BE PLACED WHEN AIR TEMPERATURE IS ABOVE 30° F (−1° C).
   - 2.3 GRADE CONTROL – ESTABLISH AND MAINTAIN REQUIRED LINES AND ELEVATIONS FOR EACH COURSE DURING CONSTRUCTION.
   - 2.4 CRUSHED AGGREGATE BASE COURSE – THE TOP LAYER OF BASE COURSE SHALL CONFORM TO SECTIONS 301 AND 305, STATE HIGHWAY SPECIFICATIONS. CLEAN RECYCLED CRUSHED CONCRETE MAY BE USED IF APPROVED BY GEOTECHNICAL ENGINEER OF RECORD.
   - 2.5 BINDER COURSE AGGREGATE – THE AGGREGATE FOR THE BINDER COURSE SHALL CONFORM TO SECTIONS 460.2.7 AND 315, STATE HIGHWAY SPECIFICATIONS.
   - 2.6 SURFACE COURSE AGGREGATE – THE AGGREGATE FOR THE SURFACE COURSE SHALL CONFORM TO SECTIONS 460.2.7 AND 465, STATE HIGHWAY SPECIFICATIONS.
   - 2.7 ASPHALTIC MATERIALS – THE ASPHALTIC MATERIALS SHALL CONFORM TO SECTION 455 AND 460, STATE HIGHWAY SPECIFICATIONS.
   - 2.8 SURFACE PREPARATION – NOTIFY CONTRACTOR OF UNSATISFACTORY CONDITIONS. DO NOT BEGIN PAVING WORK UNTIL DEFICIENT SUBBASE AREAS HAVE BEEN CORRECTED AND ARE READY TO RECEIVE PAVING.
3. CONCRETE PAVING SPECIFICATIONS
   - 3.1 CODES AND STANDARDS – THE PLACING, CONSTRUCTION AND COMPOSITION OF THE CONCRETE PAVEMENT SHALL BE IN ACCORDANCE WITH THE REQUIREMENTS OF SECTIONS 415 AND 416 OF THE STATE OF WISCONSIN STANDARD SPECIFICATIONS FOR HIGHWAY AND STRUCTURE CONSTRUCTION, CURRENT EDITION. HEREAFTER, THIS PUBLICATION WILL BE REFERRED TO AS STATE HIGHWAY SPECIFICATIONS.
   - 3.2 REINFORCEMENT – CONCRETE PAVEMENT SHALL BE REINFORCED WITH NOVOMESH 950 (OR EQUAL) FIBER REINFORCEMENT AT A RATE OF 5 LBS/CUBIC YARD.
   - 3.3 CURING COMPOUNDS – CURING COMPOUNDS SHALL CONFORM TO SECTION 415 OF THE STATE HIGHWAY SPECIFICATIONS.
   - 3.4 FINISHING –
     - 3.4.1 CONTRACTOR SHALL PROVIDE CONTROL JOINTS AND CONSTRUCTION JOINTS OF ONE-QUARTER CONCRETE THICKNESS AT AN EQUAL RATIO OF LENGTH TO WIDTH WHEREVER POSSIBLE WITH A MAXIMUM LENGTH BETWEEN JOINTS OF 8' ON CENTER.
     - 3.4.2 EXTERIOR CONCRETE SURFACES SHALL BE BROOM FINISHED.
     - 3.4.3 ALL CONCRETE SURFACES TO BE SEALED WITH TYPE TK-26UV CONCRETE SEALANT.
   - 3.5 CRUSHED AGGREGATE BASE COURSE – THE BASE COURSE SHALL CONFORM TO SECTIONS 301 AND 305, STATE HIGHWAY SPECIFICATIONS. CLEAN RECYCLED CRUSHED CONCRETE MAY BE USED IF APPROVED BY GEOTECH ENGINEER OF RECORD.
   - 3.6 SURFACE PREPARATION – NOTIFY CONTRACTOR OF UNSATISFACTORY CONDITIONS. DO NOT BEGIN PAVING WORK UNTIL DEFICIENT SUBBASE AREAS HAVE BEEN CORRECTED AND ARE READY TO RECEIVE PAVING.
4. PAVEMENT MARKING SPECIFICATIONS
   - 4.1 CONTRACTOR SHALL COORDINATE STRIPING COLOR WITH OWNER PRIOR TO CONSTRUCTION.
   - 4.2 PROVIDE CONTRACTOR GRADE LATEX, STRIPING PAINT. ALL STRIPING SHALL BE APPLIED IN ACCORDANCE WITH MANUFACTURER'S SPECIFICATIONS.
   - 4.3 THOROUGHLY CLEAN SURFACES FREE OF DIRT, SAND, GRAVEL, OIL AND OTHER FOREIGN MATTER. CONTRACTOR RESPONSIBLE TO INSPECT PAVEMENT SURFACES FOR CONDITIONS AND DEFECTS THAT WILL ADVERSELY AFFECT QUALITY OF WORK, AND WHICH CANNOT BE PUT INTO AN ACCEPTABLE CONDITION THROUGH NORMAL PREPARATORY WORK AS SPECIFIED.
   - 4.4 DO NOT PLACE MARKING OVER UNSOUND PAVEMENTS. IF THESE CONDITIONS EXIST, NOTIFY OWNER. STARTING INSTALLATION CONSTITUTES CONTRACTOR'S ACCEPTANCE OF SURFACE AS SUITABLE FOR INSTALLATION.
   - 4.5 LAYOUT MARKINGS USING GUIDE LINES, TEMPLATES AND FORMS. STENCILS AND TEMPLATES SHALL BE PROFESSIONALLY MADE TO INDUSTRY STANDARDS. "FREE HAND" PAINTING OF ARROWS, SYMBOLS, OR WORDING SHALL NOT BE ALLOWED. APPLY STRIPES STRAIGHT AND EVEN.
   - 4.6 APPLY MARKING PAINT AT A RATE OF ONE (1) GALLON PER THREE TO FOUR HUNDRED (300–400) LINEAL FEET OF FOUR (4) INCH WIDE STRIPES. (OR TO MFG. SPECIFICATIONS)
   - 4.7 BARRICADE MARKED AREAS DURING INSTALLATION AND UNTIL THE MARKING PAINT IS DRIED AND READY FOR TRAFFIC.
   - 4.8 MARK AND STRIPE ADA PARKING SPACES APPROPRIATELY PER LOCAL CODES.

DIGGERS HOTLINE
Toll Free (800) 242-8511

JSD Professional Services, Inc.
Engineers • Surveyors • Planners

CREATE THE VISION TELL THE STORY

MADISON | MILWAUKEE | WAUSAU
APPLETON | KENOSHA | CHICAGO
COEUR D'ALENE

MILWAUKEE REGIONAL OFFICE
W238 N1610 BUSSE ROAD, SUITE 100
WAUKESHA, WISCONSIN 53188
P. 262.513.0666

CLIENT:
PROPERTY REVISION
REALTY / CONSTRUCTION / DESIGN

CLIENT ADDRESS:
3049 WEST BRIDGE STREET
GREENFIELD, WI 53221

PROJECT:
17400 WEST NATIONAL AVENUE

PROJECT LOCATION:
17400 WEST NATIONAL AVENUE
NEW BERLIN, WI 53146

PLAN MODIFICATIONS:

#	Date:	Description:
1	7/17/2020	INITIAL CITY SUBMITTAL
2		
3		
4		
5		
6		
7		
8		
9		
10		
11		
12		
13		
14		
15		

Design/Drawn:	APM
Approved:	TJB
Date:	7/17/2020

SHEET TITLE:
SITE PLAN

SHEET NUMBER:
C2.0

JSD PROJECT NO: 20-9753

THESE PLANS AND SPECIFICATIONS ARE COPYRIGHT PROTECTED AND MAY NOT BE REUSED IN WHOLE OR IN PART WITHOUT THE WRITTEN CONSENT OF JSD PROFESSIONAL SERVICES, INC.

File: R:\2020\20-9753\SW\CIVIL\Sheet\20-9753 C2.0, Site Plan.dwg Layout: C2.0 User: jpinson Plotted: Sep 11, 2020 - 9:53am Xref's:

Appendix B

Site Plan with All Parking in the Rear
(for information only)

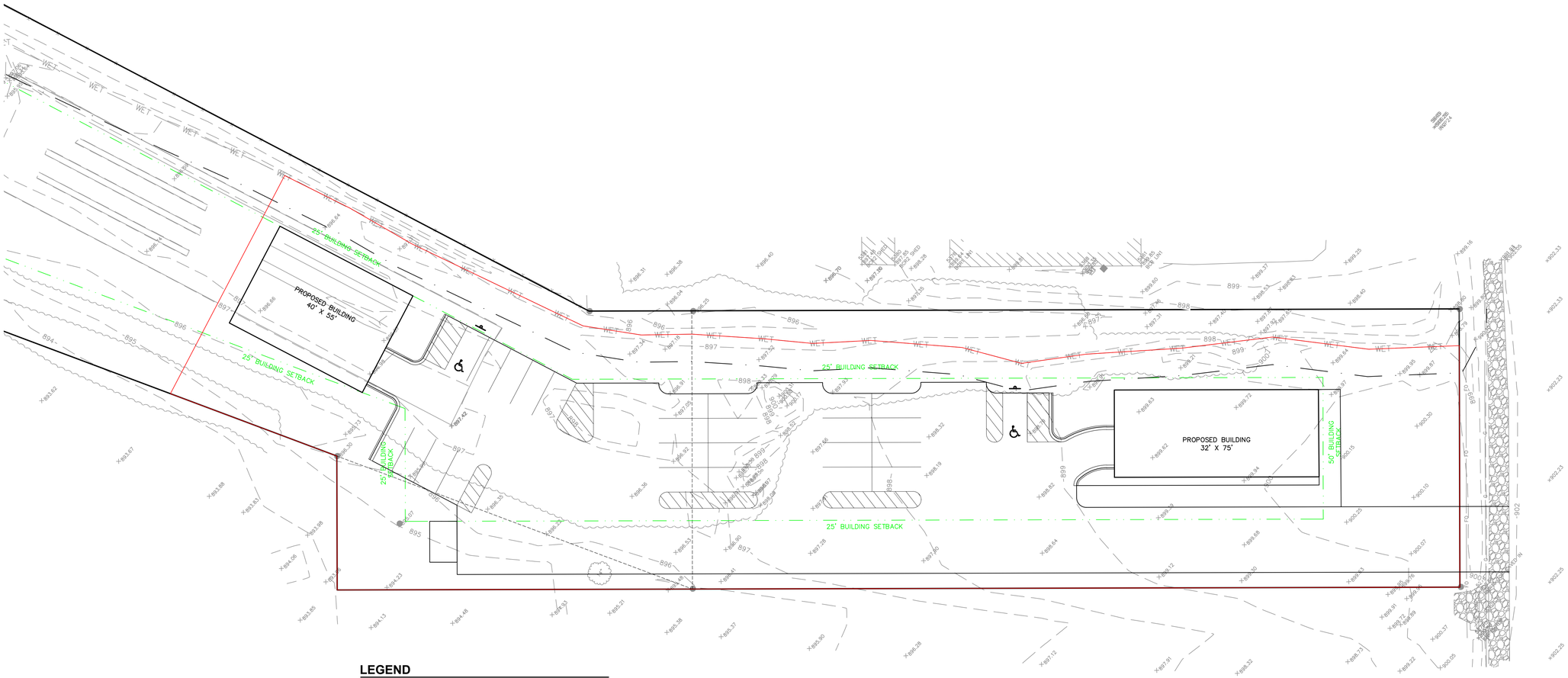

LEGEND

- PROPERTY LINE
- BUILDING OUTLINE
- PROJECT LIMITS
- SETBACK

TOTAL PROJECT AREA = 43224 SF (0.9923 AC)

TOTAL STALL COUNT = 26 STALLS

DIGGERS HOTLINE
Toll Free (800) 242-8511

JSD Professional Services, Inc.
Engineers • Surveyors • Planners

CREATE THE VISION TELL THE STORY

MADISON | MILWAUKEE | WAUSAU
APPLETON | KENOSHA | CHICAGO
COEUR D'ALENE

MILWAUKEE REGIONAL OFFICE
W238 N1610 BUSSE ROAD, SUITE 100
WAUKESHA, WISCONSIN 53188
P. 262.513.0666

CLIENT:

CLIENT ADDRESS:

PROJECT:

PROJECT LOCATION:

PLAN MODIFICATIONS:

#	Date:	Description:
1		
2		
3		
4		
5		
6		
7		
8		
9		
10		
11		
12		
13		
14		
15		

Design/Drawn:

Approved:

SHEET TITLE:

OPTION A (2020-07-06)

SHEET NUMBER:

EXHIBIT

JSD PROJECT NO:

THESE PLANS AND DESIGNS ARE COPYRIGHT PROTECTED AND MAY NOT BE USED IN WHOLE OR IN PART WITHOUT THE WRITTEN CONSENT OF JSD PROFESSIONAL SERVICES, INC.

File: R:\2020\209753\DWG\20-9753 Layout - Alternative.dwg Layout: 24X36 SHEET User: jsimon Plotted: Oct 09, 2020 - 9:47am Xref's:

Appendix C

Adjacent Building Parking Configuration

Comparable Building Parking Comparison

Proposed Building: 17400 W. National Ave

#	Address	Buisness Name	Front of Building	Side of Building	Behind Building
1	17390 W. National	Preferred Cleaning Service	75%	25%	0%
Proposed	**17400 W. National**	**Property ReVision**	**46%**	**0%**	**54%**
2	17600 W. National	Apple Ridge Academy	100%	0%	0%
3	17640 W. National	Unknown	40%	47%	13%
4	17770 W. National	Demski Electric	0%	100%	0%

#1
17390 W. National Ave

Approximate Parking Breakdown:

- 75% in front of building
- 25% on side of building
- 0% behind building

#2
17600 W. National Ave

Approximate Parking Breakdown:

- <u>100%</u> in front of building
- <u>0%</u> on side of building
- <u>0%</u> behind building

#3
17640 W. National Ave

Approximate Parking Breakdown:

- <u>40%</u> in front of building
- <u>47%</u> on side of building
- <u>13%</u> behind building

#4

17770 W. National Ave

Approximate Parking Breakdown:

- <u>0%</u> in front of building
- <u>100%</u> on side of building
- <u>0%</u> behind building

STAFF REPORT
EXECUTIVE SUMMARY

APPLICANT/PROJECT:	**Darin Frerichs – Berengaria Development, LLC / CSM**	
LOCATION:	**5200 S. Moorland Road (Tax Key #: 1255.991.014)**	
REQUEST:	**2-Lot Certified Survey Map**	
REVIEW SCHEDULE:	**CSM Received:**	**11/24/2021**
	Completeness Determination:	**11/29/2021**
	90-Day Time Limit Expires:	**2/22/2022**
	Final Common Council Action (expected):	**2/22/2022**
	90-Day Extension Expires:	**5/23/2022**
D.R.C. RECOMMENDATION:	**Recommend to Plan Commission approval of the request to <u>table</u> the application based on the attached letter from the applicant.**	

1. **The applicant needs additional time to make revisions.**

<u>ATTACHMENTS:</u>
Location Map
Request from Applicant

City of New Berlin
Community Development

LD-2102520
Marcus Outlot
5200 S. Moorland Road

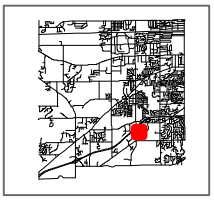

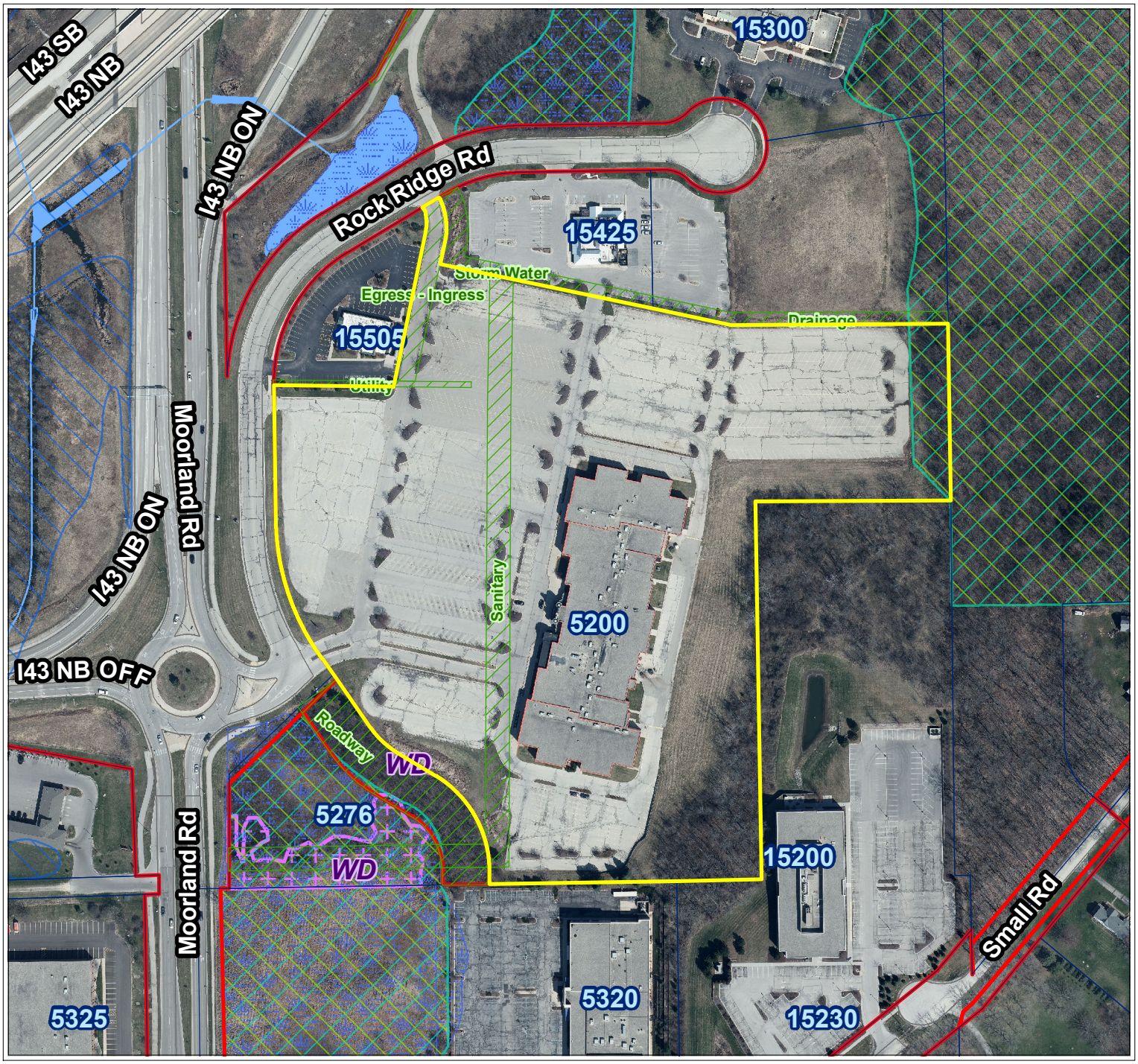

City of New Berlin
Department of Community Development
3805 S Casper Dr.
New Berlin WI 53151
(262) 797-2445
www.newberlin.org

Legend

- Parcels
- Road Right-of-Way

Floodplain DFIRM (FEMA 2014)

Flood Zone

- FEMA DFIRM - Zone A
- FEMA DFIRM - Zone AE
- FEMA DFIRM - 0.2% Annual Chance
- Zoning Boundaries

Zoning Wetland Registration

Wetland Registration Type

- Registered Wetland
- Outside Wetland

Environmental Corridor

Corridor Type

- Isolated Natural Resource Area
- Primary Environmental Corridor
- Secondary Environmental Corridor

Sewer Service Area (MMSD)

Sewershed

- Current
- Ultimate

N

0 90 180 Feet

The information and depictions herein have been produced using data available through photogrametric means by the City of New Berlin. The informations and depictions herein are for informational purposes and the City of New Berlin specifically disclaims accuracy in this reproduction and specifically admonishes and advises that any and all depiction, measurements, distances depicted herein and as to which specific or precise accuracy is required should be determined by procurement of certified maps, surveys, plats, Flood Insurance Studies, or other official means.

Map Printed: 12/17/2021 9:57:17 AM

Wall, Kelly

From: Darin Frerichs <darin.frerichs@berengariadevelopment.com>
Sent: Friday, December 10, 2021 3:06 PM
To: Wall, Kelly
Subject: NB Rock Ridge Outparcel CSM Table & extension

Good Afternoon Kelly,

I hope this email finds you well. Please consider this email as our official request to TABLE our proposed 1.25 CSM for Rock Ridge Road/ Marcus Cinema you have in hand with a 90 day extension.

Please let me know if you have any questions or concerns with this request.

Thank you for your help and time to date,

Darin Frerichs
Senior Project Manager | Architect
AIA | NCARB | CDT | LEED AP
Berengaria Development -- A Marcus Family Company
301 N Broadway, Suite 300
Milwaukee, WI 53202
T: 414-585-8882
C: 414-379-7055
Email: darin.frerichs@berengariadevelopment.com
Website: www.berengariadevelopment.com

STAFF REPORT
EXECUTIVE SUMMARY

APPLICANT/PROJECT:	**Jim Hart with the New Berlin Utility Department / Reconstruction of the Westridge Lift Station**
LOCATION:	**15451 W. Beloit Road (Tax Key #: 1254.993.001) (also referred to as 4950 S. Moorland Road (Tax Key #: 1254.982) in City files)**
REQUEST:	**Conditional Use Permit for the New Berlin Utility Department to reconstruct the Westridge Lift Station, located at 15451 W. Beloit Road.**
D.R.C. RECOMMENDATION:	**Approval of the Conditional Use Permit for the New Berlin Utility Department to reconstruct the Westridge Lift Station, located at 15451 W. Beloit Road, subject to the application, plans on file and the following conditions of approval:**

1. **Planning:**
    a. **Architecture Review Committee approval required prior to issuance of the Zoning Permit.**
    b. **Plan of operation shall be consistent with submitted plans on file.**
        i. **Applicant is proposing to reconstruct the existing lift station.**
        ii. **Final plans shall be reviewed and shall meet the O-2 Zoning District setbacks.**
    c. **Applicant shall correct all drafting errors and requested changes identified by City Staff.**
    d. **Applicant shall inform the Holiday Inn Express of the construction.**
    e. **Applicant shall coordinate any future easement work with the City Attorney.**
2. **Building Inspection:**
    a. **Building plans shall be signed and stamped by a licensed architect or professional engineer per the Wisconsin Enrolled Commercial Building Code (Comm. 361.31).**
    b. **The State of Wisconsin Commerce review can be done locally as per (Comm. 361.60) if under cubic foot rule per Wi stat 101.12(3) (b) and (g).**
    c. **Apply and obtain appropriate building, HVAC, electric, plumbing and fire permits from the City of New Berlin Building Inspection Division.**
    d. **The building shall be fully accessible from the parking lot to the interior elements Comm. 63.1101 and ICC/ANSI A117.1).**
3. **Engineering:**
    a. **Permission is required if construction staging is needed from the WisDOT Park and Ride lot.**
    b. **Plan does not show any building lighting for evening access or security purposes.**
    c. **Any lighting shall meet Zoning Code Section 275-60.I.**

DETAILS IN ATTACHED STAFF REPORT

CITY OF NEW BERLIN
DEPARTMENT OF COMMUNITY DEVELOPMENT
PLAN COMMISSION STAFF REPORT

Meeting of January 10, 2022

Jim Hart / City of New Berlin Utility Department
15451 S. Beloit Road

DATE STAFF REPORT: 12/13/2021

APPLICANT / OWNER(S): Jim Hart / City of New Berlin Utility Department

REQUEST / DESCRIPTION OF PROJECT: Conditional Use Permit for the New Berlin Utility Department to reconstruct the Westridge Lift Station, located at 15451 W. Beloit Road.

DATE OF APPLICATION / DATE FILED WITH CITY CLERK: 12/10/2021

DATE OF COMPLETENESS DETERMINATION: 12/10/2021
Application Check List Enclosed: N

PRE-APPLICATION CONFERENCE HELD: Yes
Dates of Meetings: 12/13/2021 and numerous emails / phone calls.
Site Visit: 12/20/2021

CONCEPTUAL PLAN: N/A

SIZE OF DEVELOPMENT / PARCEL(S):
Parcel Size: 4.89 Acres
Development Size: ~672 Sq. Ft.

CURRENT ZONING: O-2 (Office Park Development District)

CURRENT LAND USE: Holiday Inn Express and Westridge Lift Station

PROPOSED ZONING: N/A

PROPOSED LAND USE: Reconstruct the Westridge Lift Station

PROPOSED LOT SIZE (S): N/A

PROPOSED DENSITY: N/A

ADJACENT ZONING AND LAND USE:

North:	Zoning: B-1	Land Use: Commercial (Multi-tenant Commercial Buildings)
South:	Zoning: M-1/C-2	Land Use: I-43, Water Utility Well #10 & La Quinta Hotel
East:	Zoning: M-1/C-2	Land Use: I-43, Water Utility Well #10 & La Quinta Hotel
West:	Zoning: B-4	Land Use: Commercial (Park & Ride)

CONFORMANCE WITH COMPREHENSIVE PLAN AND MUNICIPAL CODE: Yes

Chapter 18: Neighborhood "H": Westridge & Moorland Road: Yes, this submittal meets the intent of this Chapter.

Planning Context / Vision / Development Policies:

Vision:

- *Westridge/Towne Corporate Business Park should be expanded as a major economic center for the City. The Business Park should continue to set an example of high standards in architecture, site planning, and sustainable practices. Primary uses should promote light manufacturing and office complexes. Hotels, clinics, entertainment (i.e. restaurants, shopping center, and cinemas), and retail should serve as supporting uses.*
- *The vision for the South Moorland Road Corridor includes the following elements that have been incorporated into the development of the plan:*
    - ✓ *A business community that focuses on sustainable site and building design.*
    - ✓ *Emphasis on preservation of significant environmental features such as: wetlands, woodlands, tree rows, floodplain and environmental corridors.*
    - ✓ *Focus on green infrastructure and creative storm water management elements.*
    - ✓ *A system of meaningful pedestrian connections to create a walkable and connected community.*
    - ✓ *Focus on sound planning and architecture practices.*
    - ✓ *Layout that includes a mix of retail, commercial, office and light manufacturing within the Business Park/Industrial area.*
    - ✓ *Allow for flexible site design for both residential and nonresidential development by creating Zoning Code standards that promote creativity and sustainability.*
    - ✓ *Require significant buffers between contrasting uses and main thoroughfares.*

Development Policies:

- *Emphasize mixed use developments with light industrial and office as the dominant land uses. Supporting hospitality related uses (i.e., hotels and table service restaurants) should complement the primary uses.*
- *Use low-intensity office or neighborhood-oriented retail as a buffer between the industrial areas and the residential areas to the north and west.*
- *Require traffic impact studies to be submitted for new construction as indicated in the City Zoning Code requirements. The City should ensure that impact studies include consideration of the surrounding area at full build-out.*
- *Require coordinated, pre-planned concepts/development proposals to ensure a cohesive and coordinated development pattern. Developments must take into consideration how adjacent parcels would be developed.*
- *Development proposals shall include appropriate utility easements and/or roadway reservations or dedications to ensure public infrastructure (utility or roadway) extensions/connections and a coordinated development pattern are achieved.*
- *Any future development requiring coordinated access and/or utility extensions in this area may require the applicant to submit a surety instrument to the City to cover future public improvements and cost contributions.*

Land Use:

- *Future Land Use Map: Business Park Industrial*

ZONING CODE (CHAPTER 275): Yes, this request is consistent with the current Zoning District outlined in Section 275-35B(2) of the Zoning Code.

DEVELOPMENT CODE (CHAPTER 235): N/A

PUBLIC HEARING REQUIRED: Yes, required for a Conditional Use. The Public Hearing will be held on January 10, 2022.

CONDITIONAL USE REQUIRED: Yes

USE / SITE /ARCHITECTURAL REVIEW:
Conditional Use Approval Required: Yes
Site Plan Required: Yes
Architectural Review Required: Yes, ARC will review the request on January 10, 2022.

PROPOSED ARCHITECTURE: The applicant is proposing to reconstruct the lift station. Building materials are listed in the plan and picture of similar lift station is included. The ARC will review the architecture at the January 10, 2022 meeting.

UNIQUE SITE CHARACTERISTICS:
Environmental Corridor: Yes, around the pond, but not in the area of the proposed lift station.
Wetlands on Property: Yes, there are wetlands around the pond, but not in the area of the proposed lift station.
Conservancy Districts (C-1, C-2): No
NRCS Map Classification: Not Inventoried.
Floodplain: No
Topography / Geologic: Site slopes from the west to the east towards the pond.

ALTERNATIVE TRANSPORTATION PLAN: No improvements identified.

PARK & OPEN SPACE PLAN: No improvements identified.

NATURAL RESOURCES PROTECTION:
Limits of Disturbance (LOD): Shown on plans.
Woodland, Tree, and Vegetation Protection: N/A
Wildlife Habitat Protection: N/A
Wildlife Management Plan: N/A

ENVIRONMENTAL IMPACT: No impact.

STORM WATER MANAGEMENT / DRAINAGE PLAN: Applicant is required to adhere to all City of New Berlin codes, ordinances and plans regarding storm water conveyance and maintenance and/or as identified by the Department of Community Development.

SANITARY SEWER PROVISION:
Within Current Sewer Service Area: Yes
Sewershed Capacity Available: N/A
Adequate Linkage: N/A
Onsite System Required: No

WATER USAGE CALCULATION: N/A

TRAFFIC IMPACT: No increase.

SCHOOL DISTRICT IMPACT: No impact.

PREVIOUS ACTION:
Original lift station constructed with the Westridge Business Park Development.

CONSISTENCY WITH PREVIOUS ACTION: Yes

FINDINGS:

1. Architecture Review Committee approval required prior to issuance of the Zoning Permit.
2. The property is zoned O-2 (Business Park Development District).
3. This use would be defined as a Utility, which requires a Conditional Use review.
4. There is a water main and storm sewer easement document # 2801543 on file.
5. CSM # 8282 identifies a permanent utility easement, a lift station easement and an ingress-egress easement.
6. Per Zoning Code Section 275-71 Utility is defined as - *The public and private facilities, that are not of a regional nature, such as water wells, sanitary sewers, water mains, water and sewage pumping stations, water storage tanks, water purification facilities, power and communication transmission lines, electrical power stations and substations, static transformer stations, telephone and telegraph exchanges and gas regulation stations, wastewater treatment plants, municipal incinerators and storage yards. Telecommunication facilities are not to be considered utilities. See also § 275-40.*
7. Per Section 275-27C. Approval criteria: *"The Plan Commission of the City of New Berlin will grant approval of conditional use permits only if it finds that the proposed use complies with all relevant regulations set forth in this chapter, including, but not limited to, § 275-41, Use-specific regulations, and Article VIII, General Development Regulations. Per § 66.1001(2m)(b), Wis. Stats., a conditional use does not need to be consistent with the City's Comprehensive Plan."*

(1) Approval of a conditional use. Recommendations and decisions on conditional uses should be based on consideration of the following criteria:

(a) Whether the proposed use corrects an error or meets the challenge of some changing condition, trend, or fact;

(b) Whether the proposed use is consistent with the health, safety, or general welfare of the general public;

(c) Whether the proposed use will protect the natural environment, including, but not limited to air, water, storm water management, wildlife, and vegetation.

(2) Changes to the use. In acting on a conditional use, the Plan Commission/CDA shall consider the stated purpose of the proposed use and shall approve the petition only if it finds that the applicant has provided substantial evidence as that term is defined in Wis. Stats. § 62.23(7) that the use will meet the following criteria for approval:

(a) Adequate public facilities and services (including sewage and waste disposal, water, gas, electricity, schools, police and fire protection, and roads and transportation, as applicable) will be available to serve the subject property while maintaining adequate levels of service to existing development;
<u>Yes, the proposed request is compliant.</u>

(b) Provision of public facilities to accommodate development will not place an unreasonable burden on the ability of the City to provide them;
<u>Yes, the proposed request is compliant.</u>

(c) The proposed development has taken into account impacts on surrounding properties or the natural environment, including traffic, air, water, noise, stormwater management, soils, wildlife, and vegetation;
<u>Yes, the proposed request is compliant.</u>

(d) The land is suitable for development and will not cause unreasonable soil erosion or have an unreasonable adverse effect on rare or irreplaceable natural areas; and
<u>Yes, the proposed request is compliant.</u>

(e) The proposed use will not be used to legitimize a nonconforming use or structure
Yes, the proposed request is compliant. The lift station requires upgrades.

D.R.C RECOMMENDATION: Approval of the Conditional Use Permit for the New Berlin Utility Department to reconstruct the Westridge Lift Station, located at 15451 W. Beloit Road, subject to the application, plans on file and the following conditions of approval: **SEE EXECUTIVE SUMMARY.**

ATTACHMENTS:
Location Map
Waiver Letter
Plans

City of New Berlin
Community Development

CU-2102623
Westridge Lift Station
15451 W. Beloit Road (Tax Key #: 1254993001)

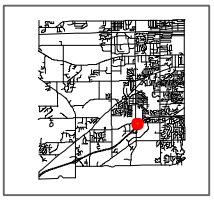

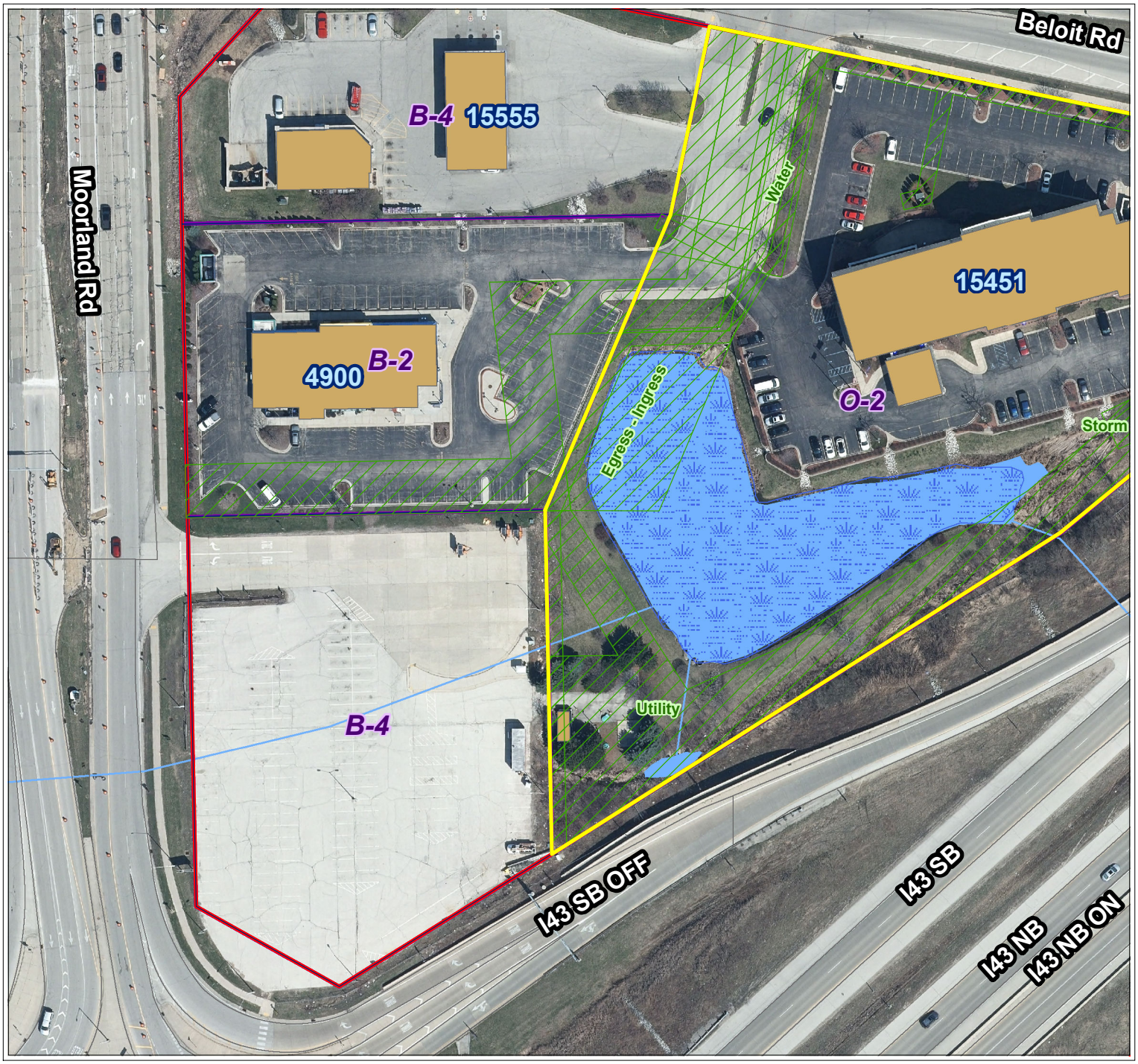

City of New Berlin
Department of Community Development
3805 S Casper Dr.
New Berlin WI 53151
(262) 797-2445
www.newberlin.org

Legend

- Parcels
- Road Right-of-Way

Floodplain DFIRM (FEMA 2014)

Flood Zone

- FEMA DFIRM - Zone A
- FEMA DFIRM - Zone AE
- FEMA DFIRM - 0.2% Annual Chance
- Zoning Boundaries

Zoning Wetland Registration

Wetland Registration Type

- Registered Wetland
- Outside Wetland

Environmental Corridor

Corridor Type

- Isolated Natural Resource Area
- Primary Environmental Corridor
- Secondary Environmental Corridor

Sewer Service Area (MMSD)

Sewershed

- Current
- Ultimate

N

0 40 80 Feet

The information and depictions herein have been produced using data available through photogrametric means by the City of New Berlin. The informations and depictions herein are for informational purposes and the City of New Berlin specifically disclaims accuracy in this reproduction and specifically admonishes and advises that any and all depiction, measurements, distances depicted herein and as to which specific or precise accuracy is required should be determined by procurement of certified maps, surveys, plats, Flood Insurance Studies, or other official means.

Map Printed: 12/16/2021 4:05:03 PM

From: Hart, Jim
To: Kessler, Greg; Jones, Nikki; Diane L. Thoune
Cc: Welch, Mark; Graser, Joe
Subject: Administrative Adjustment
Date: Wednesday, December 15, 2021 8:51:24 AM

Good Morning,

We are requesting an Administrative Adjustment for a 5' variance for a setback of 20' from the DOT property line on the west side of the new proposed lift station.

The reasons are listed below:

1. We need a straight shot out of the wet well into the force main instead of multiple bends.
2. During construction we still need to operate the existing lift station as the new lift station is built and installed. If we have to move the new station over we will have to put bends in to go around the existing Dry well (Elevator Shaft).
3. The more bends in the piping decrease the efficiency of the pumps. Thus we may need to purchase a higher horse power pumps costing a significant amount of money.
4. By moving the building to the east 5' instead of the 10' it will be easier to connect to the new piping to the existing force main thus saving money during the installation.

Please let me know if you need any further information.

Thank you,

Jim Hart
Utility Manager
City of New Berlin
3805 S Casper Drive
New Berlin, WI 53151
262.786.7086
www.newberlin.org

CITY OF NEW BERLIN

WESTRIDGE LIFT STATION REHABILITATION

WAUKESHA COUNTY, WISCONSIN

811 Know what's below. Call before you dig.

DIGGERS HOTLINE
Toll Free (800) 242-8511
Milwaukee Area (414) 259-1181
Hearing Impaired TDD (800) 542-2289
www.DiggersHotline.com
WIS. STATUTE 182.0175 (1974) REQUIRES MIN. OF 3 WORK DAYS NOTICE BEFORE YOU EXCAVATE.

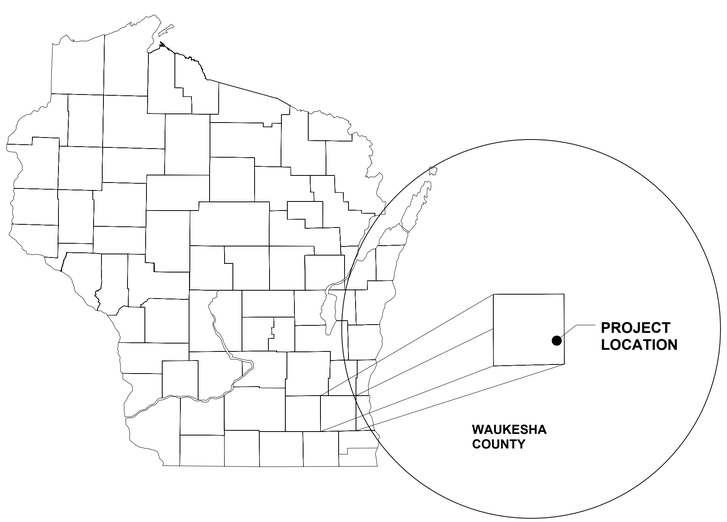

GENERAL LOCATION MAP

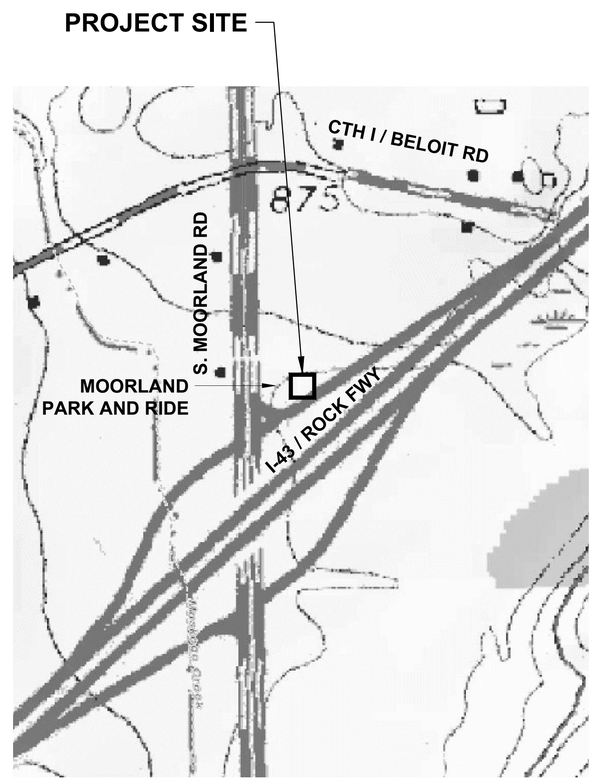

PROJECT LOCATION MAP

PLAN SHEET INDEX

DWG NO.	SHEET NO.	DRAWING TITLE
GENERAL INFORMATION		
G-001	1	Cover
G-002	2	General Notes
CIVIL		
C-101	3	Existing Site Conditions
C-102	4	Site Demolition Plan
C-103	5	Site Plan
C-104	6	Site Grading and Erosion Control Plan
C-105	7	Site Utilities Plan
C-501	8	Erosion Control Details
C-502	9	Construction Details (1 of 2)
C-503	10	Construction Details (2 of 2)
STRUCTURAL		
S-101	11	Structural Building Plan
S-102	12	Structural Elevation Plan
S-103	13	Structural Section Plan
S-201	14	Wet Well Cover Structural Details
S-501	15	Structural Details
MECHANICAL		
M-101	16	Existing Lift Station and Wet Well Sections
M-102	17	Lift Station Piping Plan
M-103	18	Lift Station and Wet Well Sections
ELECTRICAL		
E-001	19	Electrical General Notes, Symbols, and Abbreviations
E-101	20	Electrical Site Demolition Plan
E-102	21	Electrical Site Plan
E-103	22	Lift Station Lighting, Power, and Systems Plan
E-501	23	Lift Station Electrical Details
E-601	24	Demolition One-Line Diagram
E-602	25	One-Line Diagram
E-603	26	Electrical Schedules (1 of 3)
E-604	27	Electrical Schedules (2 of 3)
E-605	28	Electrical Schedules (3 of 3)
E-606	29	Interconnect Diagram
HVAC		
H-103	30	Lift Station Heating, Ventilation and Cooling Plan
H-501	31	HVAC Schedules and Details

ClarkDietz
500 N. 3RD STREET
SUITE 200
WAUSAU, WI 54403
PHONE : 715.845.1333 www.clarkdietz.com

90% SUBMITTAL
NOT FOR CONSTRUCTION

PROJECT TITLE
CITY OF NEW BERLIN
WESTRIDGE LIFT STATION REHABILITATION
WAUKESHA COUNTY, WI

DESIGNED BY: DLT
DRAWN BY: IWD
CHECKED BY: TSW
DATE CHECKED: 11/23/21

DATE	REVISION
11/29/21	90% SET
09/30/21	50% SET

DRAWING TITLE
COVER

PROJECT No.
N0430020

DRAWING No.
G-001

DWG 1 OF 31 DWGS

NOTE: DIMENSIONAL DATA IS NOT TO BE OBTAINED BY SCALING ANY PORTION OF THIS DRAWING.

PLOT DATE 11/30/2021 9:43 AM
P:\N0430020_NEW BERLIN - WESTRIDGE LIFT STATION REHA\DESIGN\CAD\SHEETS\01-GENERAL\G-COVER.DWG ISAAC W. DOLAN SAVE TIME 11/29/2021 1:00:10 PM

UTILITIES

DIGGER'S HOTLINE
800-242-8544 (TOLL FREE)

EVERSTREAM - COMM
262-446-9821 (USIC)

AT&T DIST. - COMM
262-446-9821 (USIC)

TIME WARNER CABLE - COMM
262-446-9821 (USIC)

WE ENERGIES - ELECTRIC & GAS
262-446-9821 (USIC)
262-574-3064 (OFFICE)
JOHN ANDERSON

NEW BERLIN UTILITIES
4000 S. CASPER DRIVE
NEW BERLIN, WI 53151
262-786-7086
JOE GRASER

WISCONSIN DOT SE REGION
141 NW BARSTOW STREET
WAUKESHA, WI 53187
262-548-5902

811 Know what's below. Call before you dig.

ABBREVIATION

AGG	AGGREGATE
APP	APPROXIMATE
BC, BOC, B/C	BACK OF CURB
CL, C/L	CENTER LINE
EP, EOP, E/P	EDGE OF PAVEMENT
FL, F/L	FLOW LINE
R/L	REFERENCE LINE
RP	RADIUS POINT
RW, R/W, ROW	RIGHT-OF-WAY
NML	NORMAL
EB	EAST BOUND
WB	WEST BOUND
SPCL	SPECIAL

SURVEY NOTES

- SURVEY WAS PERFORMED USING NAD83 SPC WI SOUTH, VERTICAL NAVD88.
- THE EXISTING UTILITIES WERE NOT MARKED BY DIGGER'S HOTLINE.
- RIGHT-OF-WAY AND LOT LINES ARE APPROXIMATE AND WERE DRAWN USING CSM BEARINGS AND DISTANCES FROM SECTION CORNERS.
- A BOUNDARY SURVEY WAS NOT PERFORMED.

GENERAL NOTES

1. THE CONTRACTOR SHALL NOTIFY THE CITY, THE UTILITY SUPERINTENDENT, AND ALL LOCAL UTILITY COMPANIES A MINIMUM OF 48 HOURS IN ADVANCE OF PERFORMING ANY WORK. RE-NOTIFICATION SHALL BE REQUIRED IF ANY PHASE OF WORK IS SUSPENDED FOR MORE THAN TWO (2) DAYS.

DIGGER'S HOTLINE	800-242-8511 OR 811
CLARK DIETZ, INC., DIANE THOUNE	715-845-1333 ext. 2527
NEW BERLIN UTILITIES	262-786-7086
WE ENERGIES	262-574-3064

2. NOT ALL OF THE UTILITY LINES, WHETHER ABOVE OR BELOW GROUND, HAVE BEEN SHOWN ON THE DRAWINGS. THE LOCATIONS OF EXISTING UTILITIES AS SHOWN HAVE BEEN DETERMINED FROM TOPOGRAPHICAL SURVEY AND UTILITY AS-BUILTS FOR THE EXISTING FACILITIES AND ARE GIVEN FOR THE CONVENIENCE OF THE CONTRACTOR. THE CONTRACTOR MUST REALIZE THAT THE ACTUAL LOCATIONS OF THE UTILITIES SHOWN ON THE DRAWING MAY BE DIFFERENT FROM THE LOCATIONS INDICATED AND ASSUME RESPONSIBILITY FOR ALL PIPING/UTILITIES.
3. THE CONTRACTOR IS RESPONSIBLE FOR DEBRIS REMOVAL ASSOCIATED WITH THIS PROJECT AND LEGAL DISPOSAL OF ALL MATERIALS AND EQUIPMENT REMOVED DURING DEMOLITION AND DURING THE CONSTRUCTION AND INSTALLATION OF THE NEW SYSTEMS AND EQUIPMENT.
4. PRIOR TO COMMENCING WORK, THE CONTRACTOR SHALL HAVE IN THEIR POSSESSION ALL REQUIRED PERMITS FOR THE CONSTRUCTION OF THIS PROJECT AS NECESSARY. SEE SPECIFICATIONS FOR PERMIT REQUIREMENTS.
5. INFORMATION ON DETAIL DRAWINGS TAKES PRIORITY OVER ALL GENERAL DRAWINGS AND SCHEDULES. CONFLICTS SHALL BE RESOLVED ACCORDINGLY.
6. IT IS THE CONTRACTOR'S RESPONSIBILITY TO RESTORE ALL FEATURES DISTURBED DURING CONSTRUCTION TO THEIR ORIGINAL STATE, OR BETTER. ALL RESTORATION WORK REQUIRED BEYOND THE SCOPE OF THE PLANS AND SPECIFICATIONS SHALL BE DONE AT THE CONTRACTOR'S EXPENSE UNLESS WORK WAS DONE AT THE DIRECTION OF THE OWNER OR ENGINEER AND COMPENSATION WAS AGREED UPON PRIOR TO EXECUTION OF WORK.
7. THE CONTRACTOR SHALL PRESERVE AND PROTECT PROPERTY MARKERS, SECTION CORNERS, SURVEY MARKS AND VILLAGE BENCH MARKS, SUCH AS STONES, PIPES, OR OTHER MONUMENTS ENCOUNTERED. IF THE CONTRACTOR MUST RELOCATE THE PROPERTY MARKERS OR MONUMENTS, THEIR LOCATION SHALL BE REFERENCED BY A REGISTERED LAND SURVEYOR AND THE OWNER NOTIFIED BEFORE MOVING. ALL PROPERTY MARKERS AND MONUMENTS RELOCATED DURING CONSTRUCTION SHALL BE RE-ESTABLISHED BY A REGISTERED LAND SURVEYOR AT THE CONTRACTOR'S EXPENSE.
8. THE CONTRACTOR IS SOLELY AND COMPLETELY RESPONSIBLE FOR JOB SITE CONDITIONS DURING THE COURSE OF CONSTRUCTION OF THIS PROJECT, INCLUDING EROSION CONTROL AND THE SAFETY OF ALL PERSONS AND PROPERTY; THIS REQUIREMENT SHALL APPLY CONTINUOUSLY AND NOT BE LIMITED TO NORMAL WORKING HOURS, AND THE CONTRACTOR SHALL DEFEND, INDEMNIFY AND HOLD THE OWNER AND THE ENGINEER HARMLESS FROM ALL LIABILITY, REAL, OR ALLEGED, IN CONNECTION WITH THE PERFORMANCE OF WORK ON THE PROJECT EXCEPTING FOR LIABILITY ARISING FROM THE SOLE NEGLIGENCE OF THE OWNER OR THE ENGINEER.
9. WHEN CONNECTIONS ARE TO BE MADE TO EXISTING PIPING AND STRUCTURES, THE LOCATION AND ELEVATION OF THE EXISTING PIPING AND OTHER UTILITIES SHALL BE FIELD VERIFIED AND NOTIFICATION GIVEN TO THE OWNER IF THE EXISTING PIPING IS FOUND TO BE DIFFERENT THAN THAT SHOWN ON THE DRAWINGS.
10. EXISTING WESTRIDGE LIFT STATION PLANS AND SECTIONS TAKEN FROM "WESTRIDGE SEWAGE PUMP STATION" PLANS BY RUEKERT MIELKE, DATED SEPTEMBER 1994. CONTRACTOR SHALL VERIFY DIMENSIONS IN FIELD.
11. CONTRACTOR IS RESPONSIBLE FOR PROVIDING ALL NECESSARY SEWAGE BYPASS PUMPING AND/OR WASTE HAULING DURING CONSTRUCTION. PROVIDE AND INSTALL MANHOLE PLUGS, HOSE, PUMPS, ETC. AS NECESSARY. BYPASS PLAN SHALL BE SUBMITTED TO THE OWNER AND ENGINEER FOR APPROVAL A MINIMUM OF 48 HOURS PRIOR TO BEGINNING BYPASS OPERATIONS. CONTRACTOR MAY UTILIZE THE CITY OF NEW BERLIN'S EXISTING FORCE MAIN BYPASS CONNECTION LOCATED ON THE LIFT STATION SITE. CONTRACTOR SHALL COORDINATE USE OF THE CITY'S EXISTING FACILITIES WITH THE OWNER AND ENGINEER. THE COST OF BYPASS OPERATIONS SHALL BE CONSIDERED INCIDENTAL TO THE CONTRACT.
12. SEE WETLAND MAP IN APPENDIX. SITE IS ADJACENT TO WETLANDS. NO CONSTRUCTION ACTIVITIES OR MATERIAL STORAGE SHALL IMPACT WETLANDS.
13. SITE ACCESS IS AVAILABLE THROUGH THE ADJACENT WISCONSIN DEPARTMENT OF TRANSPORTATION PARK AND RIDE LOT.
14. CONTRACTOR MAY PARK EQUIPMENT IN ADJACENT PARK AND RIDE LOT. DO NOT BLOCK DRIVEWAY OR TRAFFIC FLOW. DO NOT STORE MATERIALS IN LOT. CONTRACTOR IS RESPONSIBLE FOR ANY DAMAGE TO THIS LOT.
15. ALL SHEET NOTE IDENTIFIERS (LETTERS AND NUMBERS) ARE SPECIFIC TO THE SHEET THE NOTES ARE PLACED AND DO NOT CORRELATE WITH NOTE IDENTIFIERS ON OTHER SHEETS.
16. PROVIDE DEWATERING AS NECESSARY TO COMPLETE THE WORK SHOWN IN THE PLAN. SHEET PILING AND/OR SHORING MAY BE REQUIRED. ALL DEWATERING-RELATED ACTIVITIES (E.G., PERMITTING, WELLS, TREATMENT, ETC.) SHALL BE CONSIDERED INCIDENTAL TO THE CONTRACT.
17. CONTRACTOR SHALL BE PREQUALIFIED BY THE CITY OF NEW BERLIN. SEE PROJECT MANUAL FOR ADDITIONAL INFORMATION.

SYMBOL LEGEND

CABLE TV PEDESTAL
SATELLITE DISH
TELEPHONE BOX
TELEPHONE BOOTH
TELEPHONE POLE
TELEPHONE MANHOLE
TELEPHONE PEDESTAL
TELEPHONE PEDESTAL PAY PHONE
FIRE HYDRANT
FLUSH OUT HYDRANT
WATER SPIGOT
WATER SERVICE BOX
WELL
WATER METER
WATER MANHOLE
WATER VALVE
ELECTRIC BOX
ELECTRIC METER
ELECTRIC MANHOLE
ELECTRIC PEDESTAL
FLOOD LIGHT
HANDHOLE
ORNAMENTAL STREET LIGHT
PARKING LOT LIGHT DOUBLE
PARKING LOT LIGHT SINGLE
POWER POLE
POWER POLE WITH LIGHT
POWER POLE W/TRANSFORMER
POWER POLE W/TRANSFORMER & LIGHT
STREET LIGHT
TRANSFORMER BOX
YARD LIGHT
SPRINKLER CONTROL BOX
SPRINKLER HEAD
GAS SERVICE BOX
GAS METER
GAS REGULATOR
GAS VALVE
GAS VENT PIPE
REFLECTIVE PAVEMENT MARKER 1 WAY
REFLECTIVE PAVEMENT MARKER 2 WAY
RAILROAD FLASHING SIGNAL
RAILROAD CROSSING GATE
RAILROAD CROSSBUCK
CLEANOUT
LIFT STATION
SANITARY MANHOLE
SEPTIC TANK
SEPTIC TANK VENT
END SECTION METAL
CATCH BASIN
CATCH BASIN SQUARE
DOWNSPOUT
END SECTION CONCRETE
INLET AT CURB
STORM MANHOLE
BENCHMARK
CHISLED X
DATA COLLECTION POINT
MONUMENT
PK NAIL
TRAVERSE POINT
QUARTER CORNER
RIGHT-OF-WAY MARKER
SECTION CORNER
WITNESS CORNER
PRIVATE SIGN POST
STREET SIGN
TRAFFIC SIGN
BUSH
CONIFEROUS TREE
DECIDUOUS TREE
STUMP
GAS TANK FILLER CAP
INSPECTION WELL
METER UNKNOWN
MANHOLE
PUMP
UTILITY RISER AT POLE
UTILITY WARNING SIGN
VALVE UNKNOWN
VENT PIPE
JUNCTION BOX
STRAIN POLE
TRAFFIC SIGNAL MAST ARM
TRAFFIC SIGNAL CONTROLLER
TRAFFIC SIGNAL POST 2 WAY
TRAFFIC SIGNAL POST 3 WAY
TRAFFIC SIGNAL PED. SIGNAL HEAD
TRAFFIC SIGNAL PED. PUSH BUTTON
CORES IN PAVEMENT
SOIL BORING
AIR CONDITIONER
ANTENNA
BOLLARD
CATTLE PASS
DELINEATOR
DRAINAGE MARKER
FLAG POLE
GUY POLE
GUY WIRE
MAILBOX
PARKING BLOCK
PILLAR
PARKING METER
POST OR MISC. POLE
TANK
GATE POST
IRON PIN FOUND
FOUND/PLACE CHIS "X"
APP. ℞ APPROXIMATE PROPERTY LINE
APP. ℞ & R/W APPROXIMATE PROP. LINE AND RIGHT-OF-WAY
EXISTING ACCESS CONTROL
PROPOSED ACCESS CONTROL
BREAK
CABLE TV LINE
CABLE TV (FIBER OPTIC) LINE
OVERHEAD CABLE TV LINE
COMMUNICATION LINE
DITCH LEFT (PROFILE)
DITCH RIGHT (PROFILE)
ELECTRIC CONDUIT
OVERHEAD ELECTRIC LINE
UNDERGROUND ELECTRIC LINE
FENCE
FIBER OPTIC LINE
EXISTING FLOW LINE
GAS (SIZE)
EXISTING GUARD RAIL
PROPOSED GUARD RAIL
EXISTING HAND RAIL
PROPOSED HAND RAIL
HEATED WATER
HEDGE LINE
KEYWAY
SANITARY LATERAL
PERMANENT EASEMENT
PM CROSSWALK
PROPERTY LINE
EXISTING RIGHT-OF-WAY
PROPOSED RIGHT-OF-WAY
RAIL ROAD TRACKS
RAW WATER LINE (SIZE)
REMOVAL - 1
REMOVAL - 2
REVERSE SLOPE
SANITARY PIPE
COMBINATION SEWER PIPE
SANITARY FORCE MAIN
SECTION LINE
SHEET PILING
SILT FENCE
STAGE CONSTRUCTION JOINT
STORM EXISTING
STORM PROPOSED
STORM LINE (WATER MAIN QUALITY)
OVERHEAD TELEPHONE (FIBER OPTIC)
UNDERGROUND TELEPHONE (FIBER OPTIC)
OVERHEAD TELEPHONE
UNDERGROUND TELEPHONE
TEMPORARY CONSTRUCTION EASEMENT - 1
TEMPORARY CONSTRUCTION EASEMENT - 2
TEMPORARY TREE EASEMENT
EXISTING TOP/BOTTOM OF SLOPE
PROPOSED TOP/BOTTOM OF SLOPE
TREE LINE
UNDERDRAIN LINE
WATER LINE (SIZE)
WATER IRRIGATION LINE
CONSTRUCTION LIMITS

Clark Dietz
500 N. 3RD STREET
SUITE 270
WAUSAU, WI 54403
PHONE : 715.845.1333 www.clarkdietz.com

90% SUBMITTAL
NOT FOR CONSTRUCTION

PROJECT TITLE
CITY OF NEW BERLIN
WESTRIDGE LIFT STATION REHABILITATION
WAUKESHA COUNTY, WI

DESIGNED BY: DLT
DRAWN BY: IWD
CHECKED BY: TSW
DATE CHECKED: 11/23/21

DATE	REVISION
11/29/21	90% SET
09/30/21	50% SET

DRAWING TITLE
GENERAL NOTES

PROJECT No.
N0430020

DRAWING No.
G-002

DWG 2 OF 31 DWGS

NOTE: DIMENSIONAL DATA IS NOT TO BE OBTAINED BY SCALING ANY PORTION OF THIS DRAWING.

PLOT DATE 11/30/2021 9:43 AM
P:\N0430020_NEW BERLIN - WESTRIDGE LIFT STATION REHA\DESIGN\CAD\SHEETS\01-GENERAL\G-GENNTS.DWG ISAAC W. DOLAN SAVE TIME 11/29/2021 11:15:59 AM

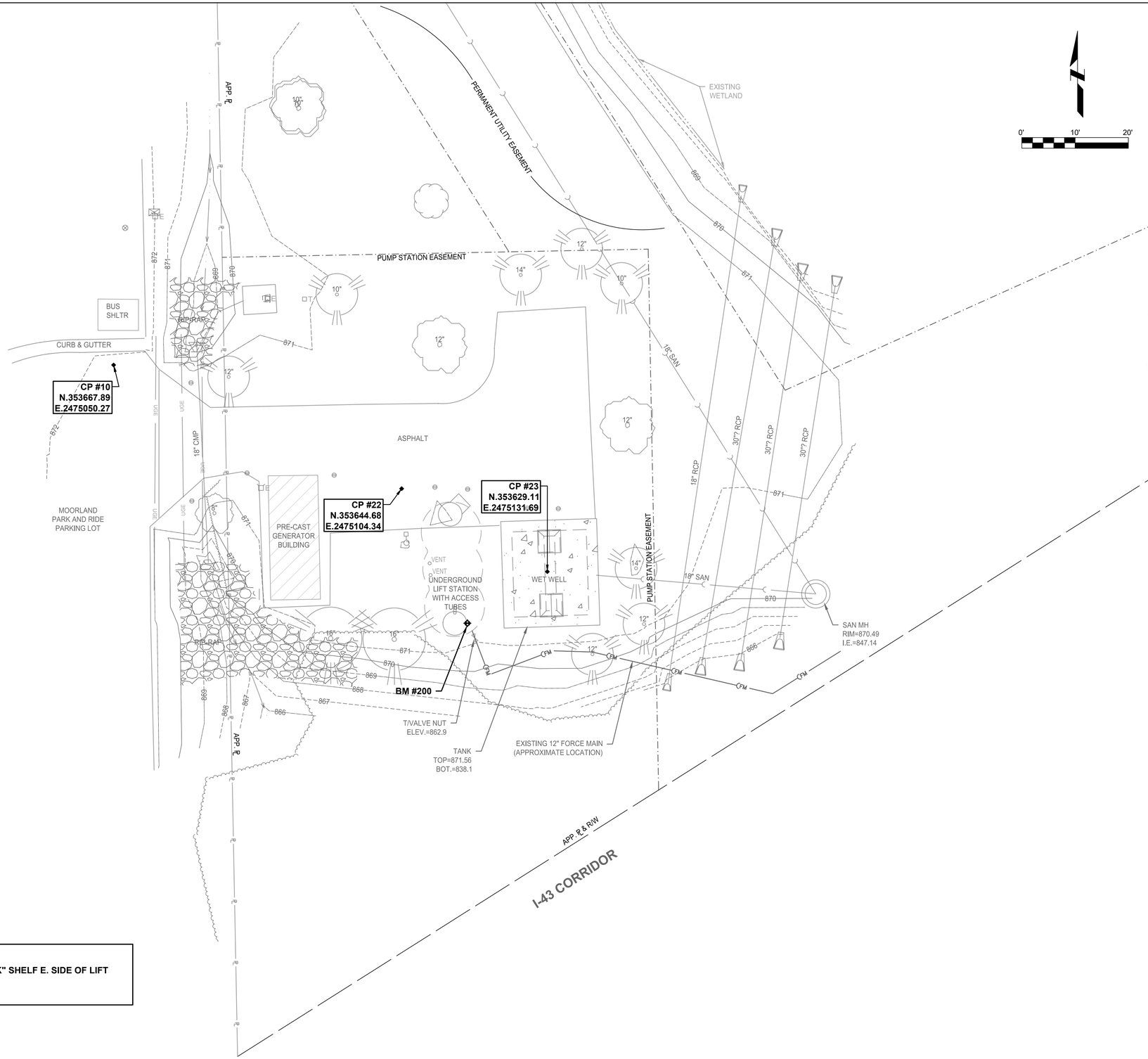

GENERAL NOTES

A. LIFT STATION EASEMENT BOUNDARY APPROXIMATED USING BEARING AND DISTANCE INFORMATION PROVIDED IN CERTIFIED SURVEY MAP (CSM) NO. 8282, DOCUMENT NO. 2218125. NOT DETERMINED BY A PROFESSIONAL LAND SURVEYOR (PLS).

B. SEE WETLAND MAP IN PROJECT MANUAL APPENDIX.

BENCH MARKS:
BM:#200
TOP OF "LIFT HOOK" SHELF E. SIDE OF LIFT STATION CAN
ELEV.=872.54

ClarkDietz
500 N. 3RD STREET
SUITE 200
WAUSAU, WI 54403
PHONE : 715.845.1333 www.clarkdietz.com

90% SUBMITTAL
NOT FOR CONSTRUCTION

PROJECT TITLE
CITY OF NEW BERLIN
WESTRIDGE LIFT STATION REHABILITATION
WAUKESHA COUNTY, WI

DESIGNED BY:	DLT
DRAWN BY:	IWD
CHECKED BY:	TSW
DATE CHECKED:	11/23/21

DATE	REVISION
11/29/21	90% SET
09/30/21	50% SET

DRAWING TITLE
EXISTING SITE CONDITIONS

PROJECT No.
N0430020

DRAWING No.
C-101

DWG 3 OF 31 DWGS

PLOT DATE 11/30/2021 9:43 AM
P:\N0430020_NEW BERLIN - WESTRIDGE LIFT STATION REHA\DESIGN\CAD\SITE\C-EXISTING SITE CONDITIONS.DWG ISAAC W. DOLAN SAVE TIME 11/29/2021 11:16:40 AM
NOTE: DIMENSIONAL DATA IS NOT TO BE OBTAINED BY SCALING ANY PORTION OF THIS DRAWING.

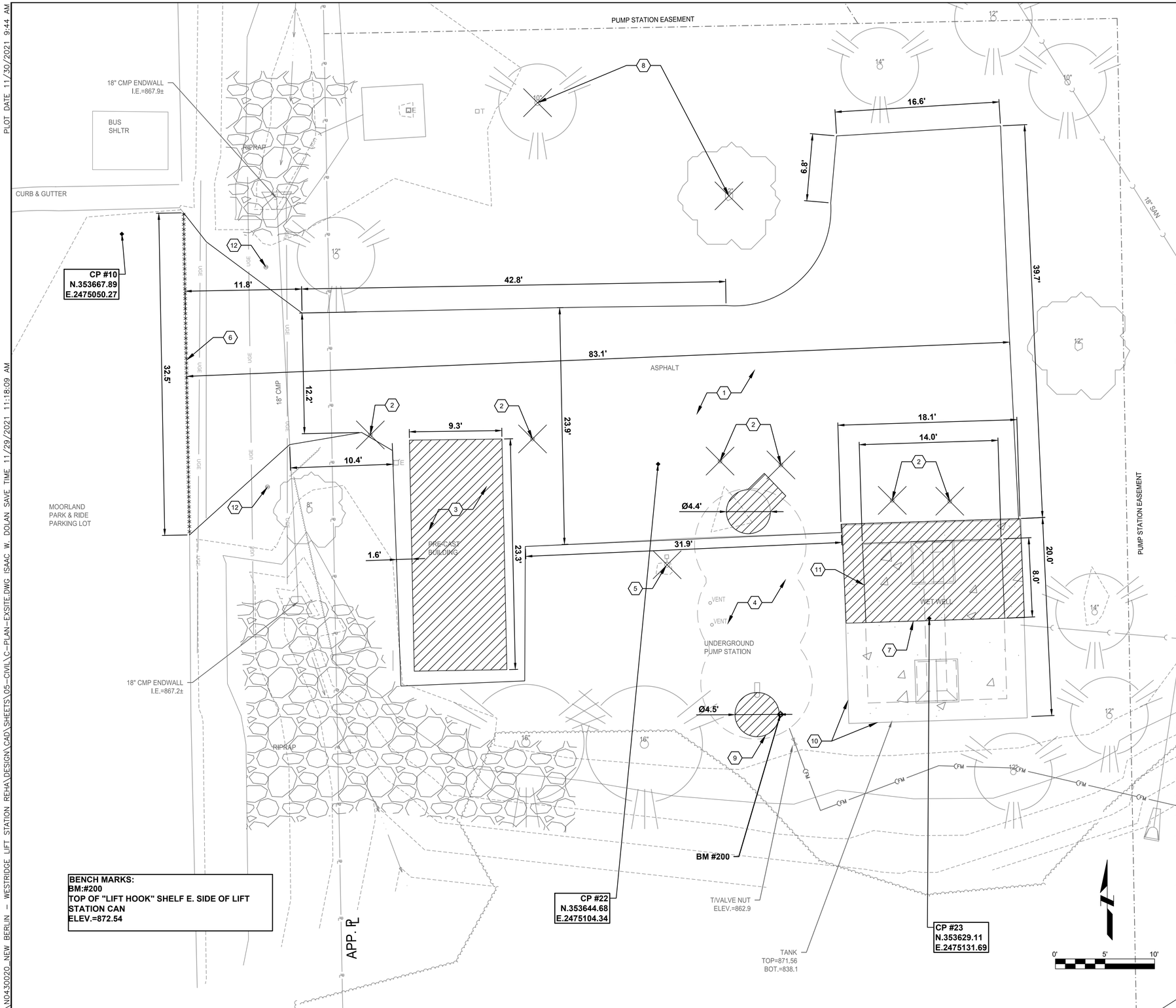

BENCH MARKS:
BM:#200
TOP OF "LIFT HOOK" SHELF E. SIDE OF LIFT STATION CAN
ELEV.=872.54

GENERAL NOTES

A. DO NOT DISTURB GROUND WITHIN 10-FEET OF NEARBY EXISTING WETLANDS.

B. PROTECT EXISTING WET WELL.

C. PROTECT TREES TO REMAIN.

D. DO NOT BLOCK DRIVEWAY. OWNER SHALL HAVE ACCESS AT ALL TIMES DURING CONSTRUCTION.

KEY NOTES

1. REMOVE EXISTING ASPHALT.
2. REMOVE EXISTING BOLLARDS (6 REQ'D).
3. REMOVE EXISTING PRE-CAST BACKUP GENERATOR BUILDING. SALVAGE GENERATOR SET AND PANEL AND RETURN TO OWNER.
4. ABANDON EXISTING LIFT STATION AS SPECIFIED IN THE PROJECT MANUAL.
5. REMOVE OVERHEAD LIGHT AND BASE. FOR ASSOCIATED ELECTRICAL REMOVAL SEE SHEET E-101.
6. SAWCUT EXISTING DRIVEWAY.
7. REMOVE ACCESS HATCH AND SECTIONS OF PRECAST COVER. SEE SHEET S-201.
8. REMOVE TREES BY CLEARING AND GRUBBING.
9. REMOVE EXISTING FORCE MAIN RISER IN ACCESS TUBE.
10. PROTECT EXISTING WET WELL.
11. REMOVE A SECTION OF THE EXISTING 6'X6' CONCRETE FILLET AND ALL EXISTING PIPING IN WET WELL. SEAL ANY OPENINGS IN WET WELL STRUCTURE WITH GROUT THAT MAY BE EXPOSED BY FILLET AND PIPING REMOVAL WORK. SEE ON PLAN SHEET .
12. PROTECT EXISTING GATE.

ClarkDietz
500 N. 3RD STREET
SUITE 700
WAUSAU, WI 54403
PHONE : 715.845.1333 www.clarkdietz.com

90% SUBMITTAL
NOT FOR CONSTRUCTION

PROJECT TITLE
CITY OF NEW BERLIN
WESTRIDGE LIFT STATION REHABILITATION
WAUKESHA COUNTY, WI

DESIGNED BY: DLT
DRAWN BY: IWD
CHECKED BY: TSW
DATE CHECKED: 11/23/21

DATE	REVISION
11/29/21	90% SET
09/30/21	50% SET

DRAWING TITLE
SITE DEMOLITION PLAN

PROJECT No.
N0430020

DRAWING No.
C-102

DWG 4 OF 31 DWGS

PLOT DATE 11/30/2021 9:44 AM
SAVE TIME 11/29/2021 11:18:09 AM
P:\N0430020_NEW BERLIN - WESTRIDGE LIFT STATION REHA\DESIGN\CAD\SHEETS\05-CIVIL\C-PLAN-EXSITE.DWG ISAAC W. DOLAN

NOTE: DIMENSIONAL DATA IS NOT TO BE OBTAINED BY SCALING ANY PORTION OF THIS DRAWING.

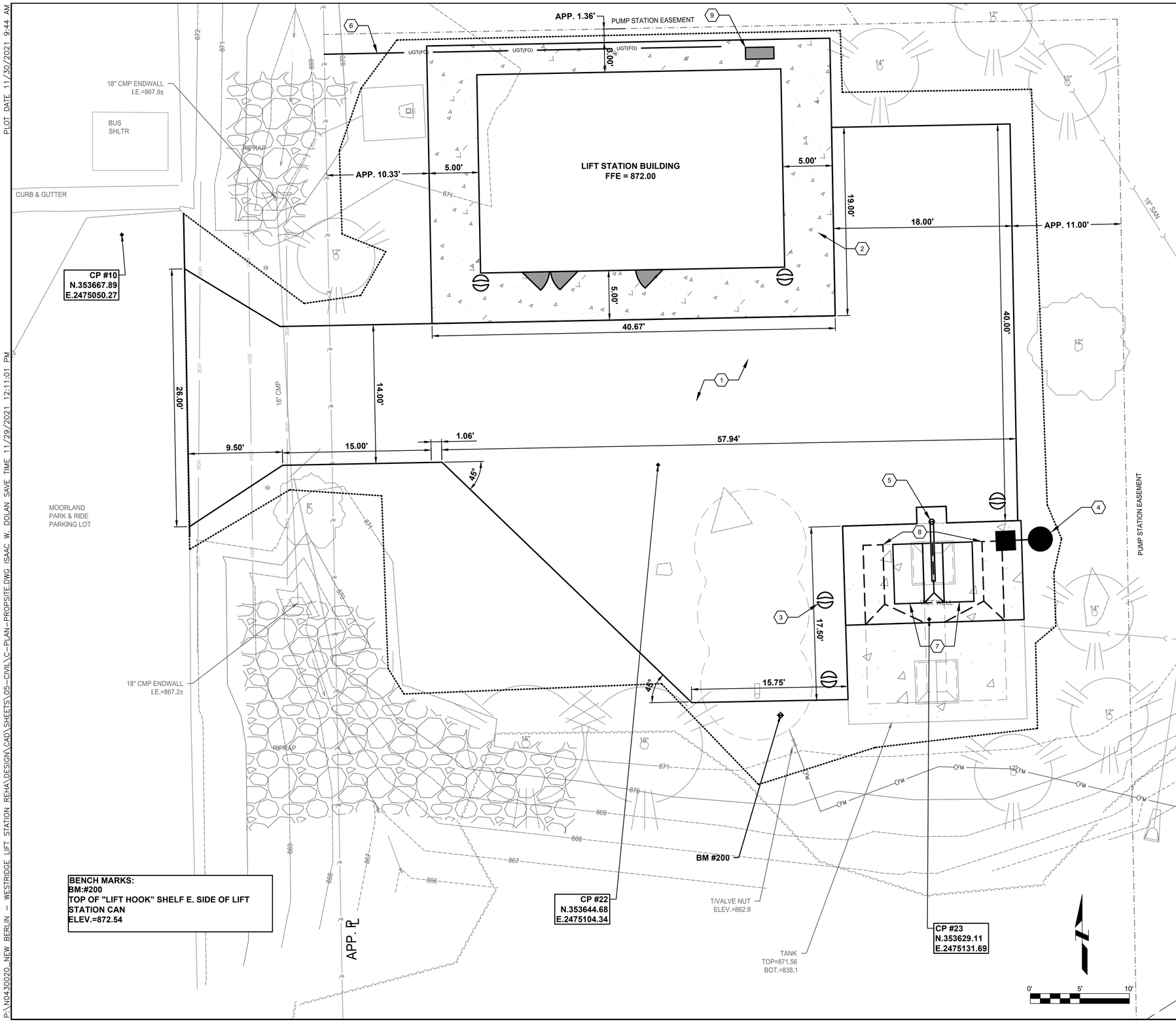

BENCH MARKS:
BM:#200
TOP OF "LIFT HOOK" SHELF E. SIDE OF LIFT STATION CAN
ELEV.=872.54

GENERAL NOTES

A. ALL DIMENSIONS ARE IN FEET UNLESS OTHERWISE NOTED IN THE PLANS.

B. PROTECT EXISTING WET WELL.

C. PROTECT TREES TO REMAIN.

D. DO NOT BLOCK DRIVEWAY. OWNER SHALL HAVE ACCESS AT ALL TIMES DURING CONSTRUCTION.

E. REPLACE ALL DISTURBED TURF AREAS WITH 6 INCHES OF TOPSOIL, SEED, FERTILIZER, AND MULCH.

F. GRADE SITE TO DIRECT WATER AWAY FROM ALL STRUCTURES AND OFF THE PAVEMENT.

KEY NOTES

1. CONSTRUCT ASPHALT DRIVEWAY. SEE DETAIL 6/C-502.
2. CONCRETE APRON AROUND BUILDING. SEE DETAIL 8/C-502.
3. BOLLARD (TYP.). SEE DETAIL 9/C-502.
4. OVERHEAD PARKING LOT LIGHT. SEE ELECTRICAL DRAWINGS FOR MORE INFORMATION.
5. DAVIT CRANE. SEE DETAIL 11/C-503.
6. CONDUIT FOR FUTURE FIBER OPTIC CABLES BY OTHERS.
7. TWO 36" X 72" ALUMINUM ACCESS HATCHES WITH SAFETY GRATES.
8. WET WELL INTERIOR IMPROVEMENTS. SEE DETAIL 12/C-503.
9. AIR CONDITIONING CONDENSER UNIT. SEE ELECTRICAL AND HVAC DRAWINGS FOR MORE INFORMATION.

ClarkDietz
500 N. 3RD STREET
SUITE 700
WAUSAU, WI 54403
PHONE : 715.845.1333 www.clarkdietz.com

90% SUBMITTAL
NOT FOR CONSTRUCTION

PROJECT TITLE
CITY OF NEW BERLIN
WESTRIDGE LIFT STATION REHABILITATION
WAUKESHA COUNTY, WI

DESIGNED BY:	DLT
DRAWN BY:	IWD
CHECKED BY:	TSW
DATE CHECKED:	11/23/21

DATE	REVISION
11/29/21	90% SET
09/30/21	50% SET

DRAWING TITLE
SITE PLAN

PROJECT No.
N0430020

DRAWING No.
C-103

DWG 5 OF 31 DWGS

NOTE: DIMENSIONAL DATA IS NOT TO BE OBTAINED BY SCALING ANY PORTION OF THIS DRAWING.

PLOT DATE 11/30/2021 9:44 AM
SAVE TIME 11/29/2021 12:11:01 PM
P:\N0430020_NEW BERLIN - WESTRIDGE LIFT STATION REHA\DESIGN\CAD\SHEETS\05-CIVIL\C-PLAN-PROPSITE.DWG ISAAC W. DOLAN

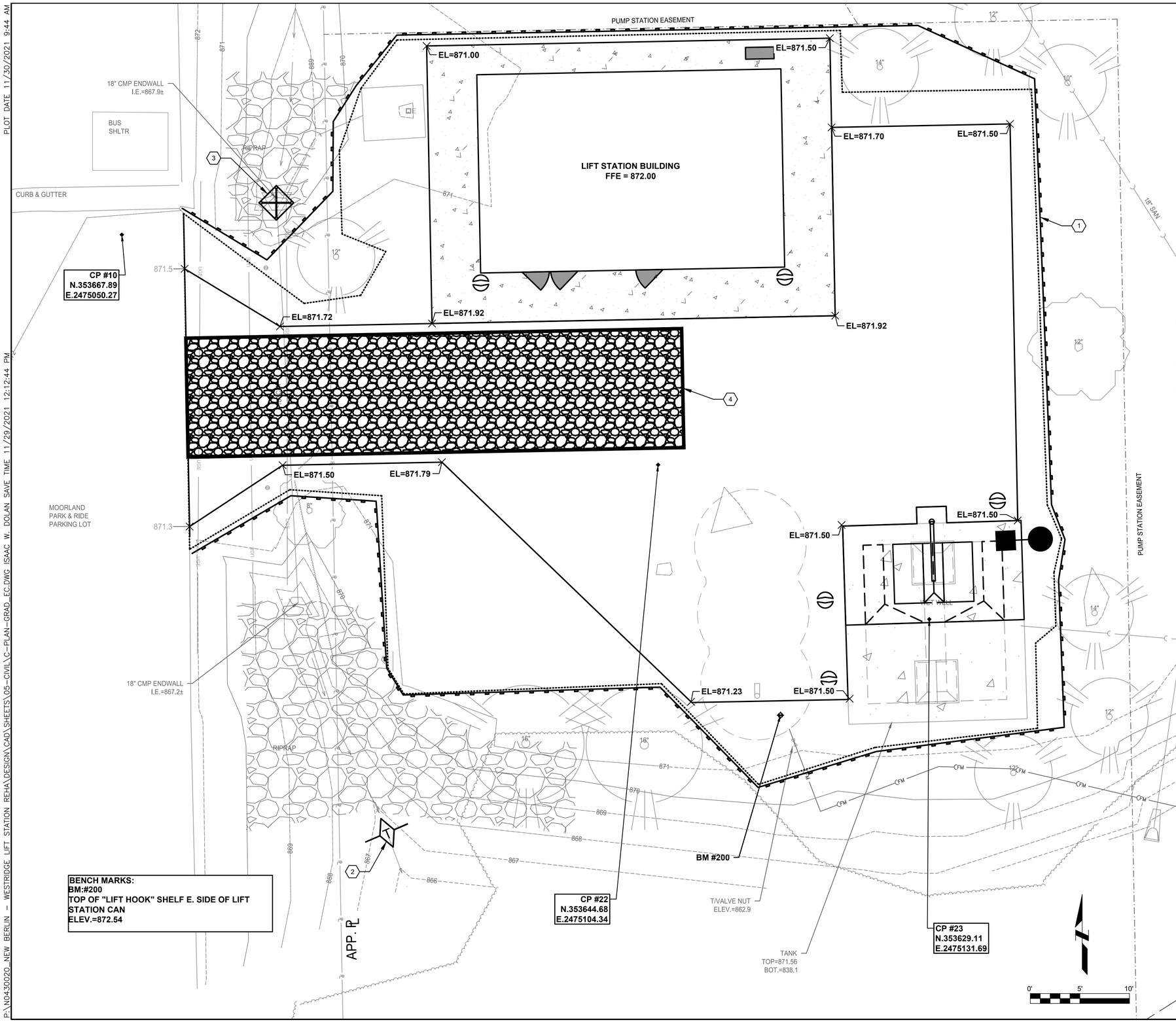

BENCH MARKS:
BM:#200
TOP OF "LIFT HOOK" SHELF E. SIDE OF LIFT STATION CAN
ELEV.=872.54

GENERAL NOTES

A. DO NOT DISTURB GROUND WITHIN 10-FEET OF NEARBY EXISTING WETLANDS.

B. PROTECT EXISTING WET WELL.

C. PROTECT TREES TO REMAIN.

D. DO NOT BLOCK DRIVEWAY. OWNER SHALL HAVE ACCESS AT ALL TIMES DURING CONSTRUCTION.

E. REPLACE ALL DISTURBED TURF AREAS WITH 6 INCHES OF TOPSOIL, SEED, FERTILIZER, AND MULCH.

KEY NOTES

1. INSTALL AND MAINTAIN SILT FENCE. SEE DETAIL 2/C-501.
2. INSTALL TEMPORARY DITCH CHECK. SEE DETAIL 1/C-501.
3. INSTALL TEMPORARY CULVERT PIPE CHECK. SEE DETAIL 3/C-501.
4. INSTALL TRACKING PAD. SEE DETAIL 4/C-501.

ClarkDietz
500 N. 3RD STREET
SUITE 200
WAUSAU, WI 54403
PHONE : 715.845.1333 www.clarkdietz.com

90% SUBMITTAL
NOT FOR CONSTRUCTION

PROJECT TITLE
CITY OF NEW BERLIN
WESTRIDGE LIFT STATION REHABILITATION
WAUKESHA COUNTY, WI

DESIGNED BY:	DLT
DRAWN BY:	IWD
CHECKED BY:	TSW
DATE CHECKED:	11/23/21

DATE	REVISION
11/29/21	90% SET
09/30/21	50% SET

DRAWING TITLE
SITE GRADING AND EROSION CONTROL PLAN

PROJECT No.
N0430020

DRAWING No.
C-104

DWG 6 OF 31 DWGS

NOTE: DIMENSIONAL DATA IS NOT TO BE OBTAINED BY SCALING ANY PORTION OF THIS DRAWING.

P:\N0430020_NEW BERLIN - WESTRIDGE LIFT STATION REHA\DESIGN\CAD\SHEETS\05-CIVIL\C-PLAN-GRAD_EC.DWG ISAAC W. DOLAN SAVE TIME 11/29/2021 12:12:44 PM PLOT DATE 11/30/2021 9:44 AM

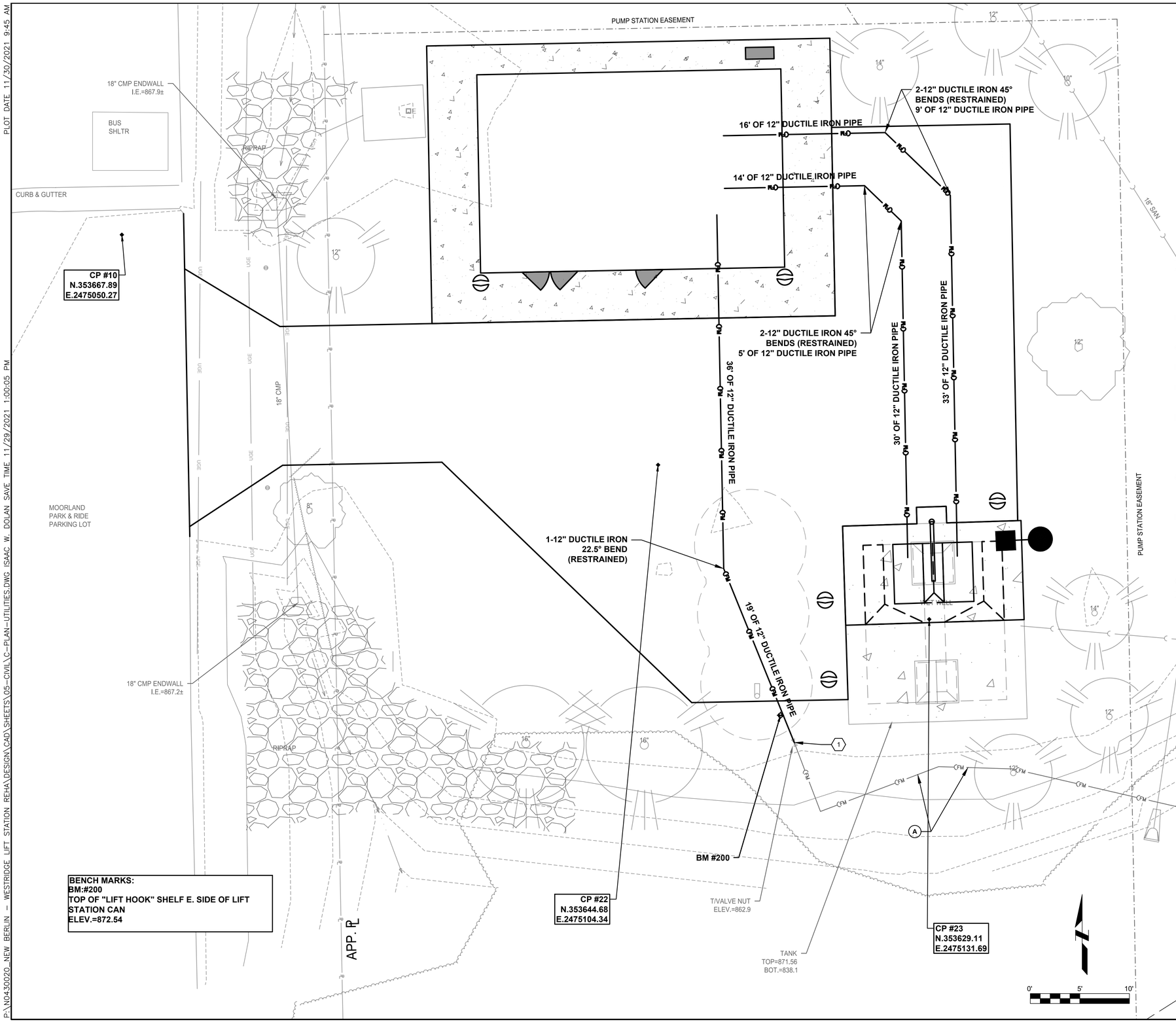

BENCH MARKS:
BM:#200
TOP OF "LIFT HOOK" SHELF E. SIDE OF LIFT STATION CAN
ELEV.=872.54

GENERAL NOTES

A. APPROXIMATE LOCATION OF EXISTING 12-INCH FORCE MAIN ACCORDING TO CITY OF NEW BERLIN SANITARY SEWER AS-BUILT (FILE NO. A 94-437). CONTRACTOR SHALL FIELD VERIFY LOCATION AND ELEVATION.

B. DO NOT DISTURB GROUND WITHIN 10-FEET OF NEARBY EXISTING WETLANDS.

C. PROTECT EXISTING WET WELL.

D. PROTECT TREES TO REMAIN.

E. DO NOT BLOCK DRIVEWAY. OWNER SHALL HAVE ACCESS AT ALL TIMES DURING CONSTRUCTION.

F. PROVIDE DEWATERING AS NECESSARY TO COMPLETE THE WORK SHOWN IN THE PLAN. SHEET PILING AND/OR SHORING MAY BE REQUIRED. ALL DEWATERING-RELATED ACTIVITIES (E.G., PERMITTING, WELLS, TREATMENT, ETC.) SHALL BE CONSIDERED INCIDENTAL TO THE CONTRACT.

G. PROVIDE BYPASS PUMPING AS NECESSARY DURING CONSTRUCTION. BYPASS PUMPING SHALL BE CONSIDERED INCIDENTAL TO THE CONTRACT.

H. BYPASS PUMPING WILL BE REQUIRED DURING SWITCH FROM THE EXISTING LIFT STATION TO THE NEW STATION. INSTALL MANHOLE PLUGS, HOSE, PORTABLE PUMPS, ETC. AS NECESSARY. HAULING TRUCKS SHALL BE AVAILABLE AS NEEDED. AT NO POINT SHALL CONTRACTOR ALLOW SEWAGE TO SPILL ON THE GROUND.

KEY NOTES

1. CONNECT TO EXISTING 12-INCH PVC FORCE MAIN. EXISTING FORCE MAIN LAYOUT AND ELEVATION IS APPROXIMATE. CONTRACTOR TO PERFORM SUBSURFACE EXPLORATION TO FIELD VERIFY LOCATION AND ELEVATION. PROTECT EXISTING VALVE.

ClarkDietz
500 N. 3RD STREET
SUITE 720
WAUSAU, WI 54403
PHONE : 715.845.1333 www.clarkdietz.com

90% SUBMITTAL
NOT FOR CONSTRUCTION

PROJECT TITLE
CITY OF NEW BERLIN
WESTRIDGE LIFT STATION REHABILITATION
WAUKESHA COUNTY, WI

DESIGNED BY:	DLT
DRAWN BY:	IWD
CHECKED BY:	TSW
DATE CHECKED:	11/23/21

DATE	REVISION
11/29/21	90% SET
09/30/21	50% SET

DRAWING TITLE
SITE UTILITIES PLAN

PROJECT No.
N0430020

DRAWING No.
C-105

DWG 7 OF 31 DWGS

NOTE: DIMENSIONAL DATA IS NOT TO BE OBTAINED BY SCALING ANY PORTION OF THIS DRAWING.

P:\N0430020_NEW BERLIN - WESTRIDGE LIFT STATION REHA\DESIGN\CAD\SHEETS\05-CIVIL\C-PLAN-UTILITIES.DWG ISAAC W. DOLAN SAVE TIME 11/29/2021 1:00:05 PM PLOT DATE 11/30/2021 9:45 AM

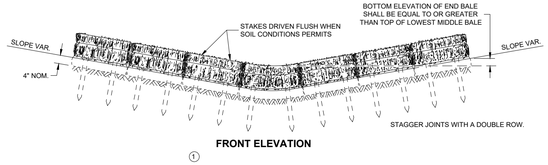

FRONT ELEVATION

①

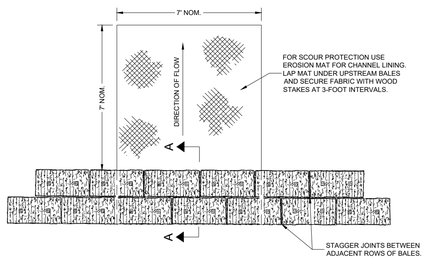

PLAN VIEW

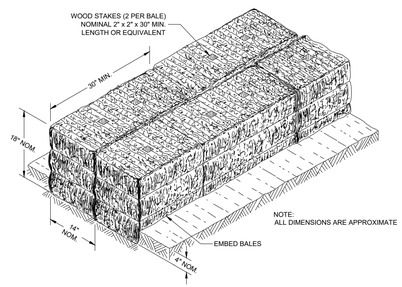

SECTION A - A

1 TEMPORARY DITCH CHECK

NOT TO SCALE

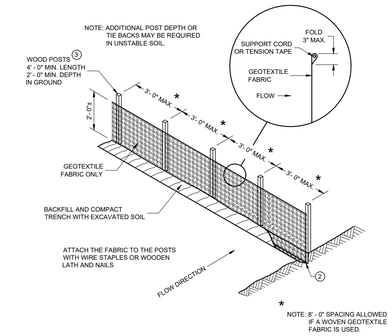

SILT FENCE

GENERAL NOTES

DETAILS OF CONSTRUCTION NOT SHOWN ON THIS DRAWING SHALL CONFORM TO THE PERTINENT REQUIREMENTS OF THE STANDARD SPECIFICATIONS AND APPLICABLE SPECIAL PROVISIONS.

① HORIZONTAL BRACE REQUIRED WITH 2" X 4" WOODEN FRAME OR EQUIVALENT AT TOP OF POSTS.

② FOR MANUAL INSTALLATIONS THE TRENCH SHALL BE A MINIMUM OF 4" WIDE AND 6" DEEP TO BURY AND ANCHOR THE GEOTEXTILE FABRIC. FOLD MATERIAL TO FIT TRENCH AND BACKFILL AND COMPACT TRENCH WITH EXCAVATED SOIL.

③ WOOD POSTS SHALL BE A MINIMUM SIZE OF 1 1/8" X 1 1/8" OF OAK OR HICKORY.

④ SILT FENCE TO EXTEND ACROSS THE TOP OF THE PIPE.

⑤ CONSTRUCT SILT FENCE FROM A CONTINUOUS ROLL IF POSSIBLE BY CUTTING LENGTHS TO AVOID JOINTS. IF A JOINT IS NECESSARY USE ONE OF THE FOLLOWING TWO METHODS: A) OVERLAP THE END POSTS AND TWIST, OR ROTATE, AT LEAST 180 DEGREES, B) HOOK THE END OF EACH SILT FENCE LENGTH.

SOURCE: WISCONSIN DEPARTMENT OF TRANSPORTATION, SDD 08E09 SILT FENCE

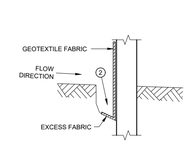

TRENCH DETAIL

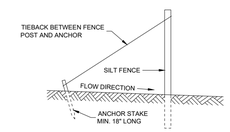

SILT FENCE TIE BACK

(WHEN REQUIRED BY THE ENGINEER)

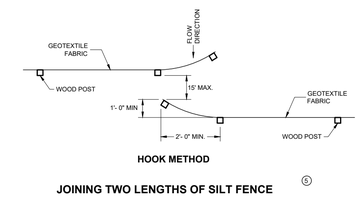

HOOK METHOD

JOINING TWO LENGTHS OF SILT FENCE

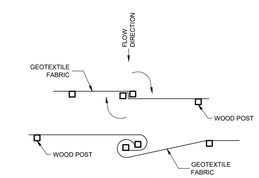

TWIST METHOD

2 SILT FENCE

NOT TO SCALE

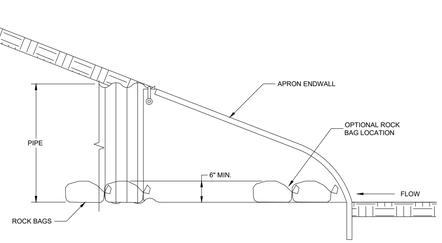

SIDE VIEW

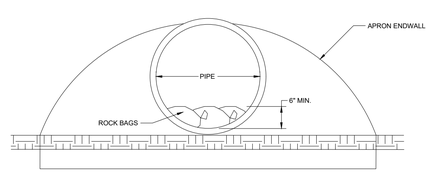

END VIEW

(INSTALL ON INLET END ONLY)

3 CULVERT PIPE CHECK

NOT TO SCALE

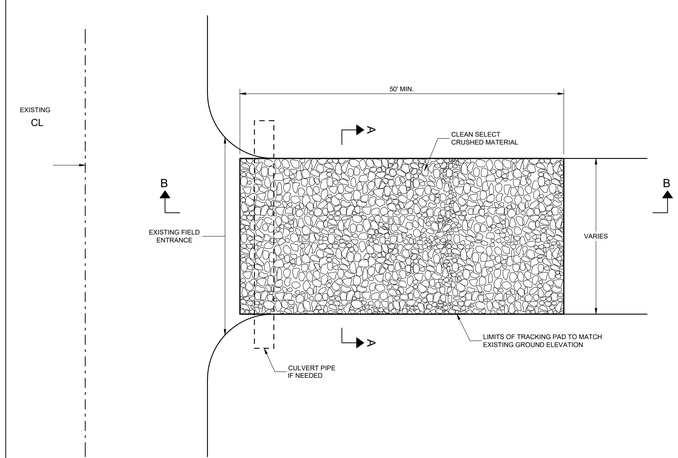

GENERAL NOTES

DETAILS OF CONSTRUCTION, MATERIALS AND WORKMANSHIP NOT SHOWN ON THIS DRAWING SHALL CONFORM TO THE PERTINENT REQUIREMENTS OF THE STANDARD SPECIFICATIONS AND THE APPLICABLE SPECIAL PROVISIONS.

TRACKING PAD SHALL BE INSPECTED DAILY. DEFICIENT AREAS SHALL BE REPAIRED OR REPLACED IMMEDIATELY.

TRACKING PAD TO BE REMOVED AFTER CONSTRUCTION IS COMPLETED.

TRACKING PAD SHALL BE THE FULL WIDTH OF THE EGRESS POINT.

SURFACE WATER MUST BE PREVENTED FROM PASSING THROUGH THE TRACKING PAD. FLOWS SHALL BE DIVERTED AWAY, AROUND OR CONVEYED UNDER THE TRACKING PAD.

CULVERT PIPE OR OTHER BMP USED TO DIVERT WATER AWAY, AROUND OR UNDER THE TRACKING PAD SHALL BE DESIGNED TO CONVEY THE 2 YEAR - 24 HOUR EVENT.

THE COST OF ADDITIONAL BMP TO DIVERT WATER ARE INCIDENTAL TO THE TRACKING PAD BID ITEM.

SOURCE: WISCONSIN DEPARTMENT OF TRANSPORTATION, SDD 08E14 TRACKING PAD

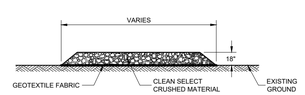

SECTION A - A

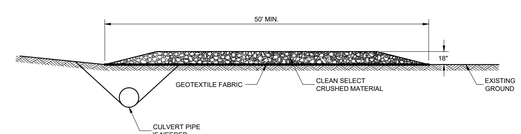

SECTION B - B

4 TRACKING PAD

NOT TO SCALE

ClarkDietz
500 N. 3RD STREET
SUITE 275
WAUSAU, WI 54403
PHONE : 715.845.1333 www.clarkdietz.com

90% SUBMITTAL
NOT FOR CONSTRUCTION

PROJECT TITLE
CITY OF NEW BERLIN
WESTRIDGE LIFT STATION REHABILITATION
WAUKESHA COUNTY, WI

DESIGNED BY:	DLT
DRAWN BY:	IWD
CHECKED BY:	TSW
DATE CHECKED:	11/23/21

DATE	REVISION
11/29/21	90% SET
09/30/21	50% SET

DRAWING TITLE
EROSION CONTROL DETAILS

PROJECT No.
N0430020

DRAWING No.
C-501

DWG 8 OF 31 DWGS

NOTE: DIMENSIONAL DATA IS NOT TO BE OBTAINED BY SCALING ANY PORTION OF THIS DRAWING.

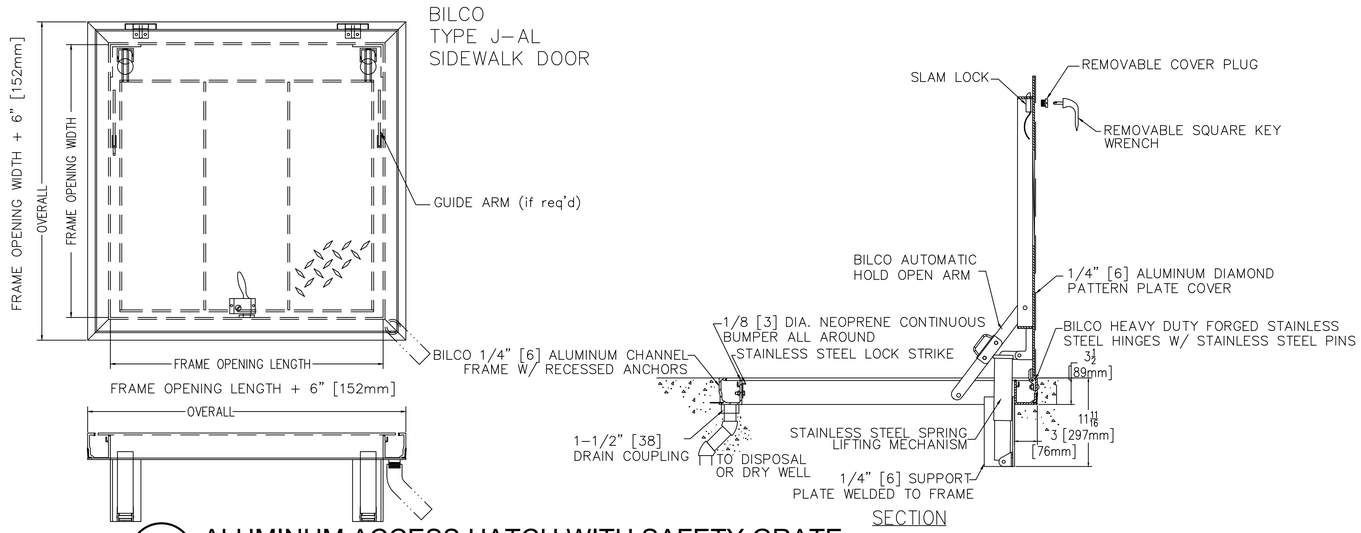

5 ALUMINUM ACCESS HATCH WITH SAFETY GRATE

NOT TO SCALE

PROPOSED GRADE IS ASSUMED TO BE EXISTING GRADE, WITH MATCHING AT THE CALLED OUT ELEVATIONS ON THE NEW STRUCTURES.

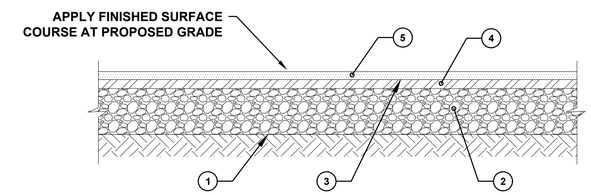

1. EXCAVATE, GRADE, SHAPE AND COMPACT SUBGRADE (CONTACT ENGINEER FOR DESIGN OPTIONS WHEN ENCOUNTERING AREAS OF UNSUITABLE SUBGRADE)
2. CRUSHED AGGREGATE BASE COURSE, 8"
3. BITUMINOUS MATERIALS (PRIME COAT) @ 0.70 GAL/SY
4. BITUMINOUS CONCRETE BINDER COURSE, 3"
5. BITUMINOUS CONCRETE SURFACE COURSE, 2"

6 TYPICAL ASPHALT DRIVE SECTION

NOT TO SCALE

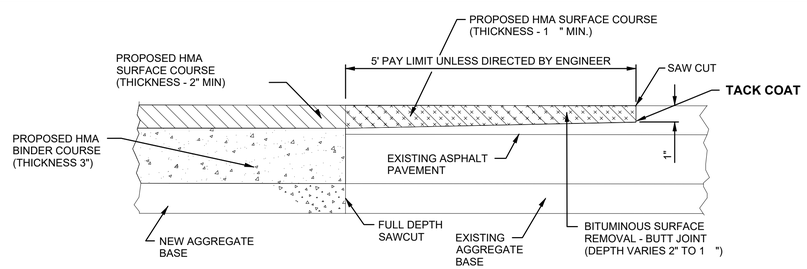

7 BUTT JOINT

NOT TO SCALE

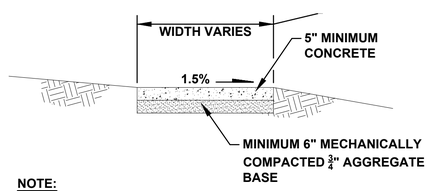

NOTE:
SIDEWALKS TO HAVE TOOLED CONTROL JOINT 5'-0" O.C. WITH EXPANSION JOINTS 25' O.C. MAX. AND ADJACENT TO ALL STRUCTURES.

8 CONCRETE APRON

NOT TO SCALE

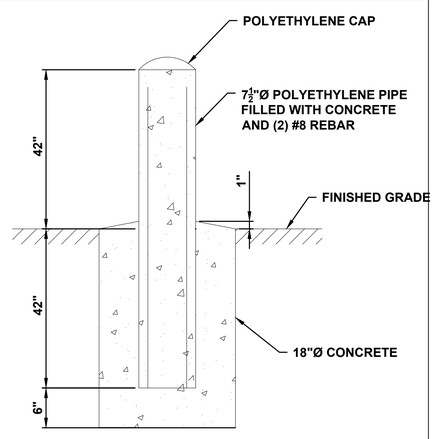

9 BOLLARD

NOT TO SCALE

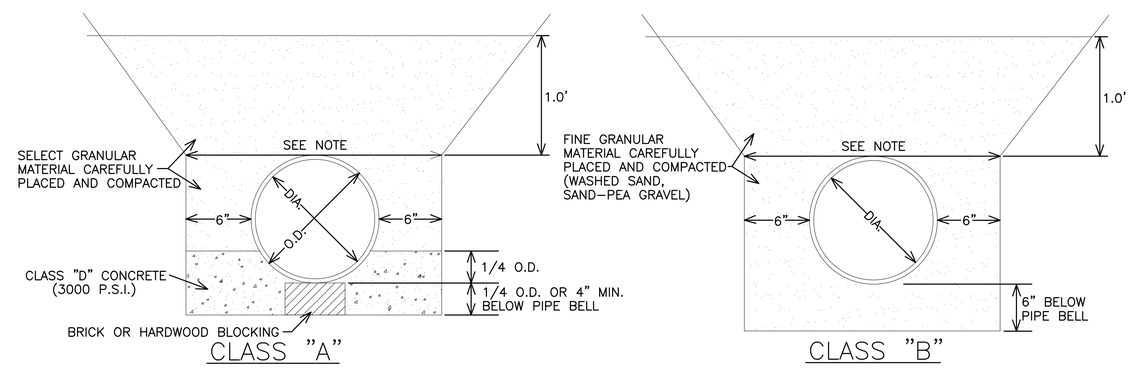

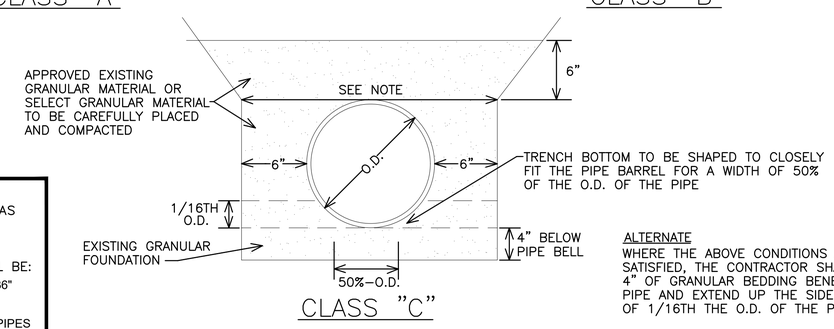

NOTE:
THE TRENCH WIDTH IS TO BE TAKEN AS THE HORIZONTAL DISTANCE AT THE OUTSIDE TOP OF THE PIPE.

THE MAXIMUM ALLOWABLE WIDTH SHALL BE:
1.) 3.0' GREATER THAN OUTSIDE DIA. FOR 36" OR LARGER PIPE

2.) 2.0' GREATER THAN OUTSIDE DIA. FOR PIPES LESS THAN 36" IN DIA.

ALTERNATE
WHERE THE ABOVE CONDITIONS ARE NOT SATISFIED, THE CONTRACTOR SHALL PLACE 4" OF GRANULAR BEDDING BENEATH THE PIPE AND EXTEND UP THE SIDE A DISTANCE OF 1/16TH THE O.D. OF THE PIPE

10 PIPE BEDDING CLASSIFICATIONS

NOT TO SCALE

ClarkDietz
500 N. 3RD STREET
SUITE 700
WAUSAU, WI 54403
PHONE : 715.845.1333 www.clarkdietz.com

90% SUBMITTAL
NOT FOR CONSTRUCTION

PROJECT TITLE
CITY OF NEW BERLIN
WESTRIDGE LIFT STATION REHABILITATION
WAUKESHA COUNTY, WI

DESIGNED BY:	DLT
DRAWN BY:	IWD
CHECKED BY:	TSW
DATE CHECKED:	11/23/21

DATE	REVISION
11/29/21	90% SET
09/30/21	50% SET

DRAWING TITLE
CONSTRUCTION DETAILS (1 OF 2)

PROJECT No.
N0430020

DRAWING No.
C-502

DWG 9 OF 31 DWGS

PLOT DATE 11/30/2021 9:45 AM
P:\N0430020_NEW BERLIN - WESTRIDGE LIFT STATION REHA\DESIGN\CAD\SHEETS\05-CIVIL\C-DETAILS.DWG ISAAC W. DOLAN SAVE TIME 11/29/2021 11:18:28 AM
NOTE: DIMENSIONAL DATA IS NOT TO BE OBTAINED BY SCALING ANY PORTION OF THIS DRAWING.

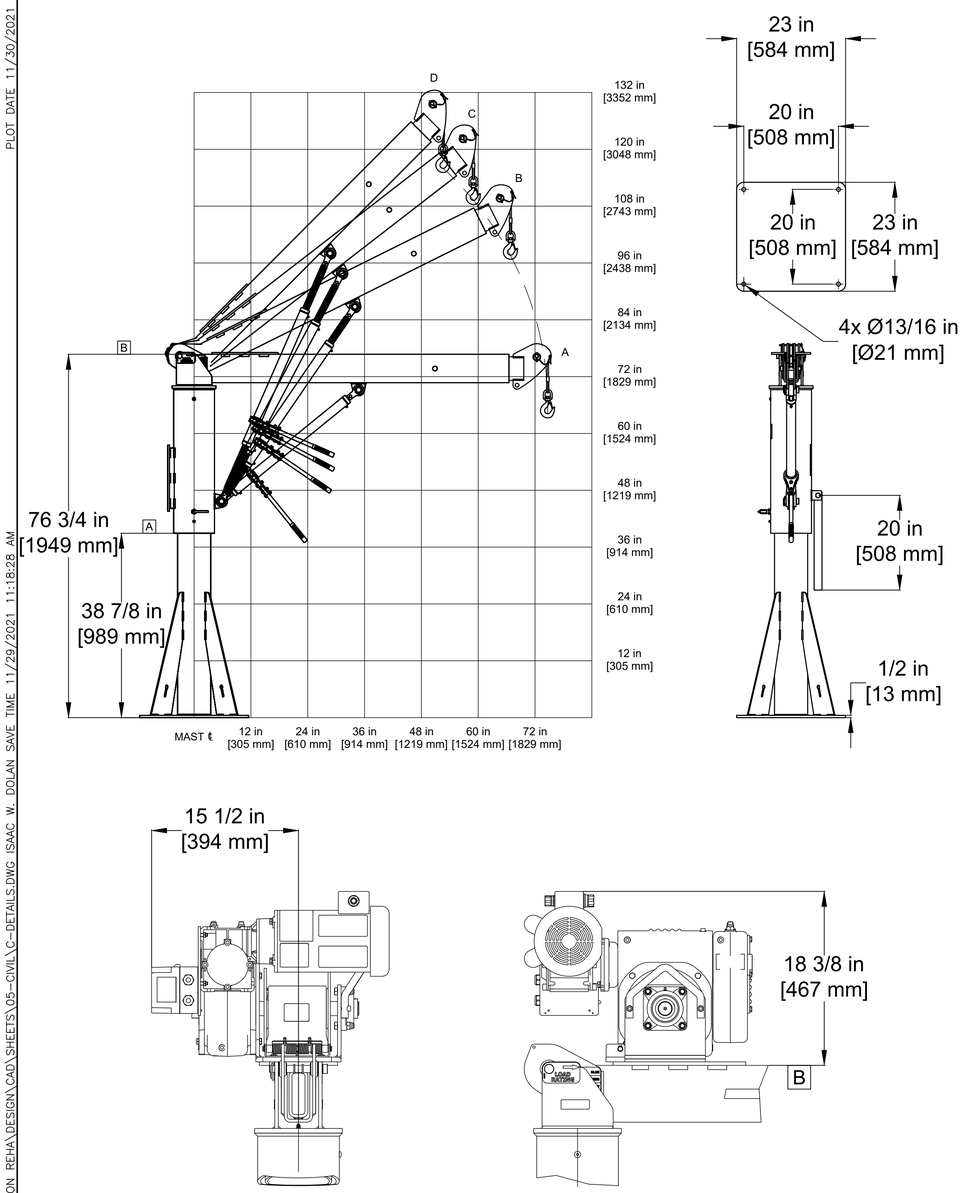

11 DAVIT CRANE
NOT TO SCALE

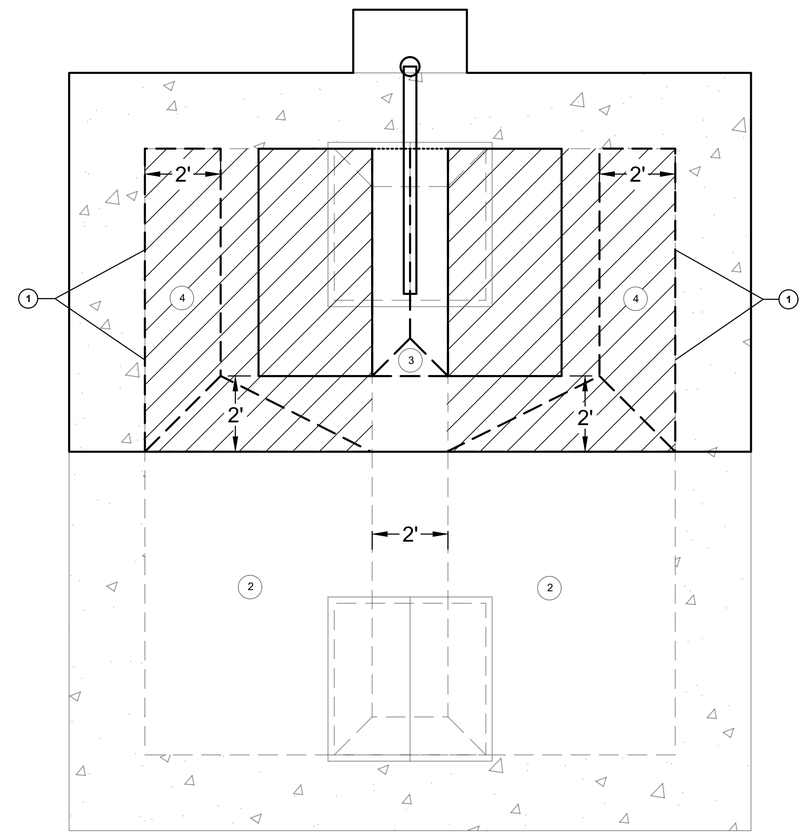

1. CONTRACTOR TO REMOVE NORTH HALF OF EXISTING 6'X6' CONCRETE FILLETS.
2. SOUTH HALF OF EXISTING 6'X6' CONCRETE FILLETS TO REMAIN.
3. 1'X1' POURED IN PLACE CONCRETE FILLET.
4. POURED IN PLACE CONCRETE FILLET AT 1:1 SLOPE.

12 WET WELL INTERIOR IMPROVEMENTS
NOT TO SCALE

ClarkDietz
500 N. 3RD STREET
SUITE 200
WAUSAU, WI 54403
PHONE : 715.845.1333 www.clarkdietz.com

90% SUBMITTAL
NOT FOR CONSTRUCTION

PROJECT TITLE
CITY OF NEW BERLIN
WESTRIDGE LIFT STATION REHABILITATION
WAUKESHA COUNTY, WI

DESIGNED BY:	DLT
DRAWN BY:	IWD
CHECKED BY:	TSW
DATE CHECKED:	11/23/21

DATE	REVISION
11/29/21	90% SET
09/30/21	50% SET

DRAWING TITLE
CONSTRUCTION DETAILS (2 OF 2)

PROJECT No.
N0430020

DRAWING No.
C-503

DWG 10 OF 31 DWGS

NOTE: DIMENSIONAL DATA IS NOT TO BE OBTAINED BY SCALING ANY PORTION OF THIS DRAWING.

P:\N0430020_NEW BERLIN - WESTRIDGE LIFT STATION REHA\DESIGN\CAD\SHEETS\05-CIVIL\C-DETAILS.DWG ISAAC W. DOLAN SAVE TIME 11/29/2021 11:18:28 AM PLOT DATE 11/30/2021 9:46 AM

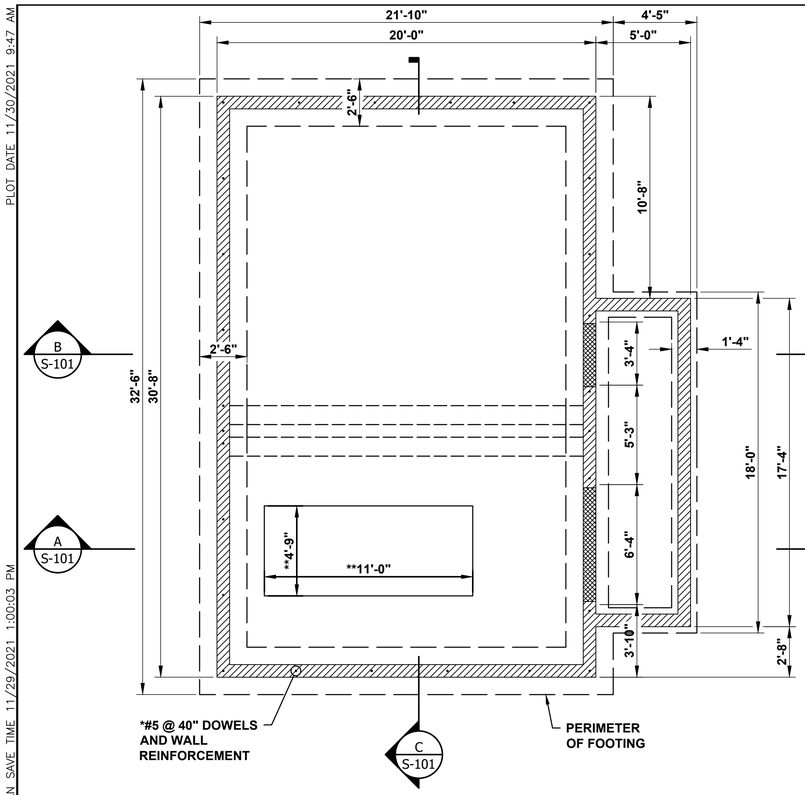

FOUNDATION PLAN

0 1' 2' 4' 8'

SCALE 1/4" = 1'

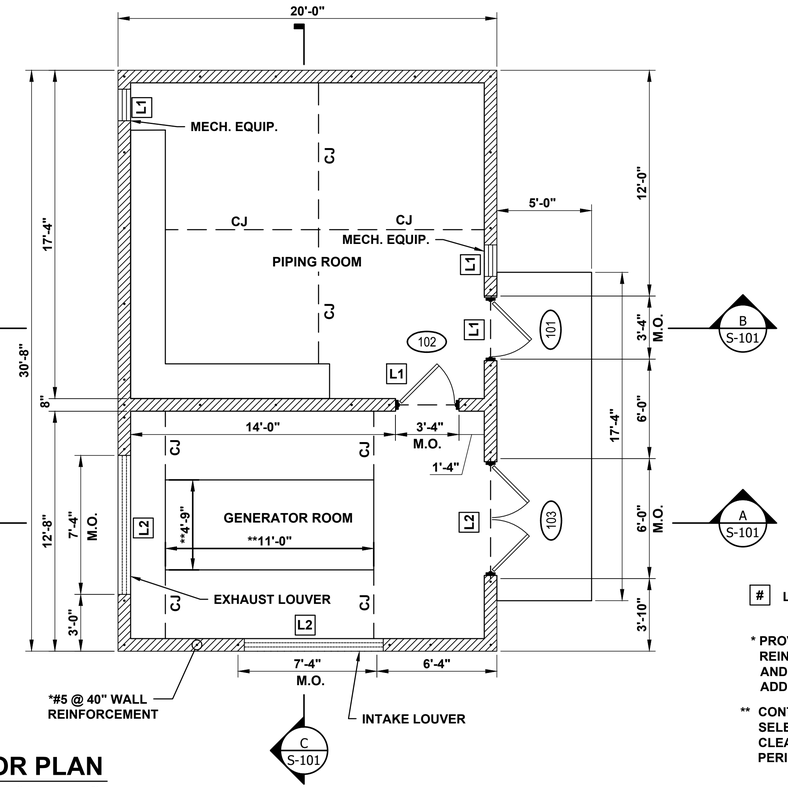

FLOOR PLAN

0 1' 2' 4' 8'

SCALE 1/4" = 1'

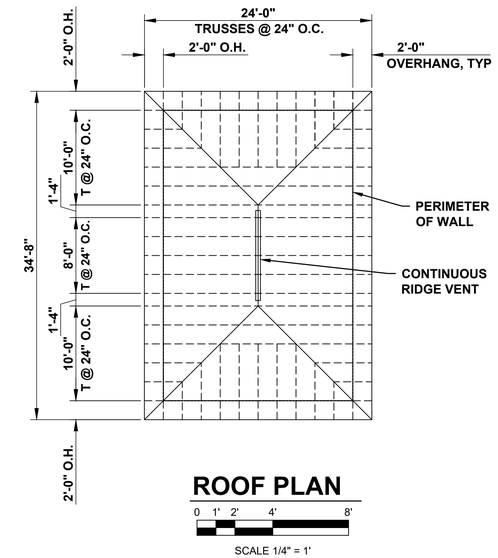

ROOF PLAN

0 1' 2' 4' 8'

SCALE 1/4" = 1'

[#] LINTEL, SEE DETAILS ON S-102

* PROVIDE ADDITIONAL DOWELS AND WALL REINFORCEMENT AT CORNERS, WALL INTERSECTIONS, AND ADJACENT TO OPENINGS AS SHOWN. SEE S-501 FOR ADDITIONAL MASONRY DETAILS.

** CONTRACTOR SHALL REVISE DIMENSIONS TO FIT SELECTED GENERATOR. PROVIDE MINIMUM 6" CLEARANCE BETWEEN EDGE OF CONCRETE AND PERIMETER OF GENERATOR BASE. SEE DETAIL 2 ON S-501.

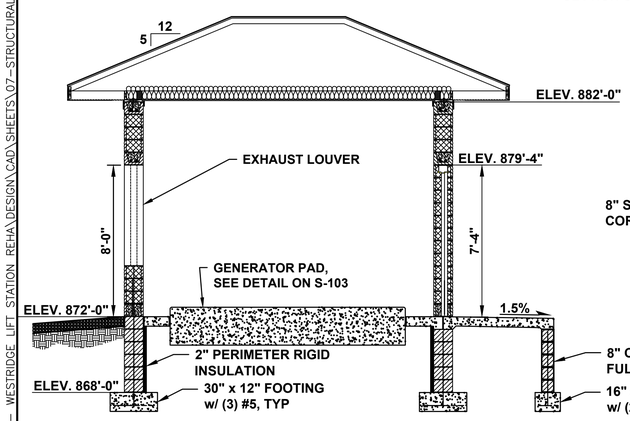

SECTION A-A

0 1' 2' 4' 8'

SCALE 1/4" = 1'

** ALTERNATE BID ITEM:
STANDING SEAM METAL ROOF OVER SELF-ADHERED ICE & WATER SHIELD.

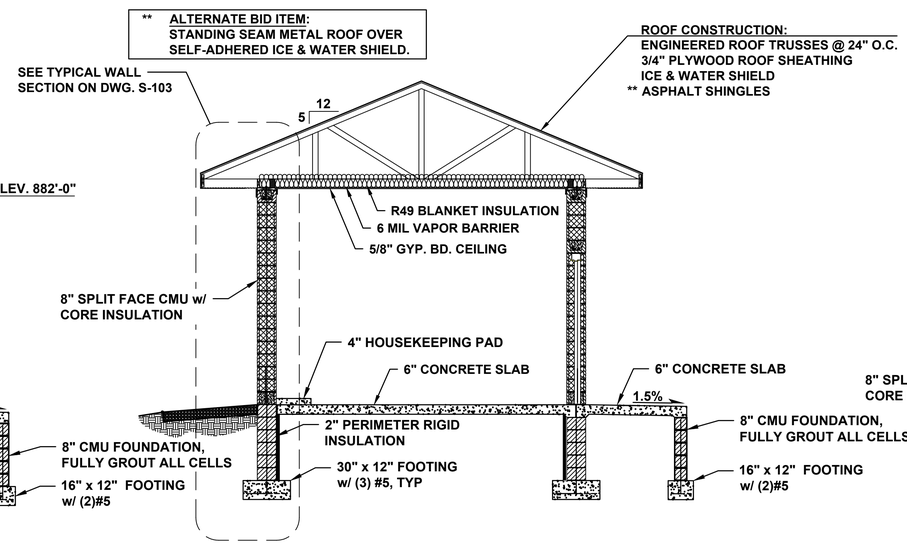

SECTION B-B

0 1' 2' 4' 8'

SCALE 1/4" = 1'

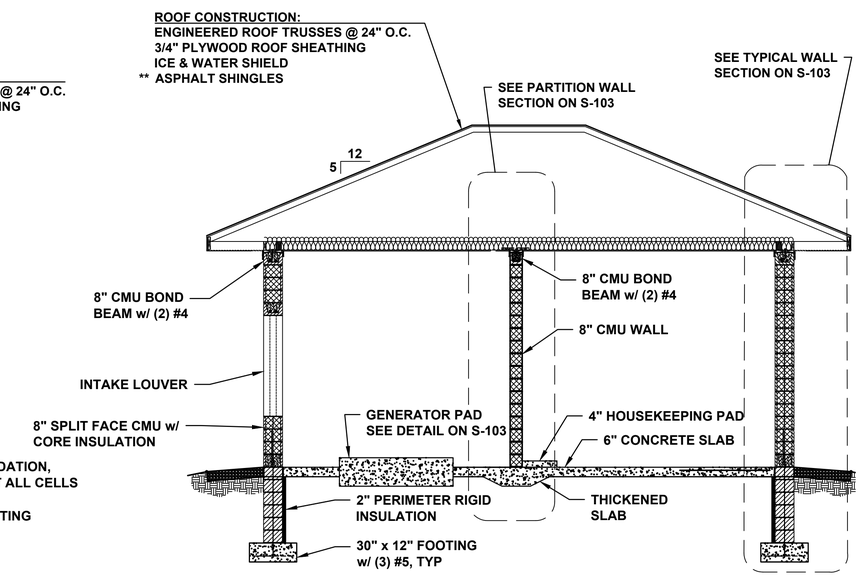

SECTION C-C

0 1' 2' 4' 8'

SCALE 1/4" = 1'

ClarkDietz
500 N. 3RD STREET
SUITE 200
WAUSAU, WI 54403
PHONE : 715.845.1333 www.clarkdietz.com

90% SUBMITTAL
NOT FOR CONSTRUCTION

PROJECT TITLE
CITY OF NEW BERLIN
WESTRIDGE LIFT STATION REHABILITATION
WAUKESHA COUNTY, WI

DESIGNED BY:	DLT
DRAWN BY:	IWD
CHECKED BY:	TSW
DATE CHECKED:	11/23/21

DATE	REVISION
11/29/21	90% SET
09/30/21	50% SET

DRAWING TITLE
STRUCTURAL BUILDING PLAN

PROJECT No.
N0430020

DRAWING No.
S-101

DWG 11 OF 31 DWGS

P:\N0430020_NEW BERLIN - WESTRIDGE LIFT STATION REHA\DESIGN\CAD\SHEETS\07-STRUCTURAL\S-PLAN.DWG ISAAC W. DOLAN SAVE TIME 11/29/2021 1:00:03 PM PLOT DATE 11/30/2021 9:47 AM
NOTE: DIMENSIONAL DATA IS NOT TO BE OBTAINED BY SCALING ANY PORTION OF THIS DRAWING.

PLOT DATE 11/30/2021 9:48 AM
P:\N0430020_NEW BERLIN - WESTRIDGE LIFT STATION REHA\DESIGN\CAD\SHEETS\07-STRUCTURAL\S-PLAN.DWG ISAAC W. DOLAN SAVE TIME 11/29/2021 1:00:03 PM

DOOR SCHEDULE

DOOR FRAMES

THERMAL BROKEN FRP FRAME

DOOR TYPES

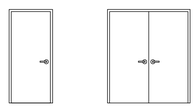

A: INSULATED FRP THERMAL BROKEN
B: INSULATED FRP THERMAL BROKEN

MARK	TYPE	LOCATION	SIZE W x H	FRAME	HARDWARE 1	2	3	4	5	6	NOTES
101	A	PIPING ROOM EXTERIOR	3-0 x 7-0	A	X	X		X	X	X	
102	A	GENERATOR ROOM	3-0 x 7-0	A	X	X		X	X	X	
103	B	GENERATOR ROOM EXT.	5-8 x 7-0	A	X	X		X	X	X	PANIC BAR ON ACTIVE LEAF

NOTES

1. PROVIDE WEATHER STRIPPING AT ALL EXTERIOR DOORS.
2. PROVIDE ALUMINUM THREASHOLDS AT EXTERIOR DOORS, ½" HIGH MAXIMUM.
3. ALL DOORS AND FRAMES (NOT INCLUDING OVERHEAD DOOR) SHALL BE FIBER REINFORCED PLASTIC (FRP).
4. DR = DOOR SIZE (INSIDE DIMENSION)

HARDWARE

1. LOCK
2. CLOSER WITH HOLD-OPEN LOCK
3. PUSH/PULL
4. PANIC BAR
5. KICKPLATE
6. WEATHERSTRIPPING AND SILL SWEEP

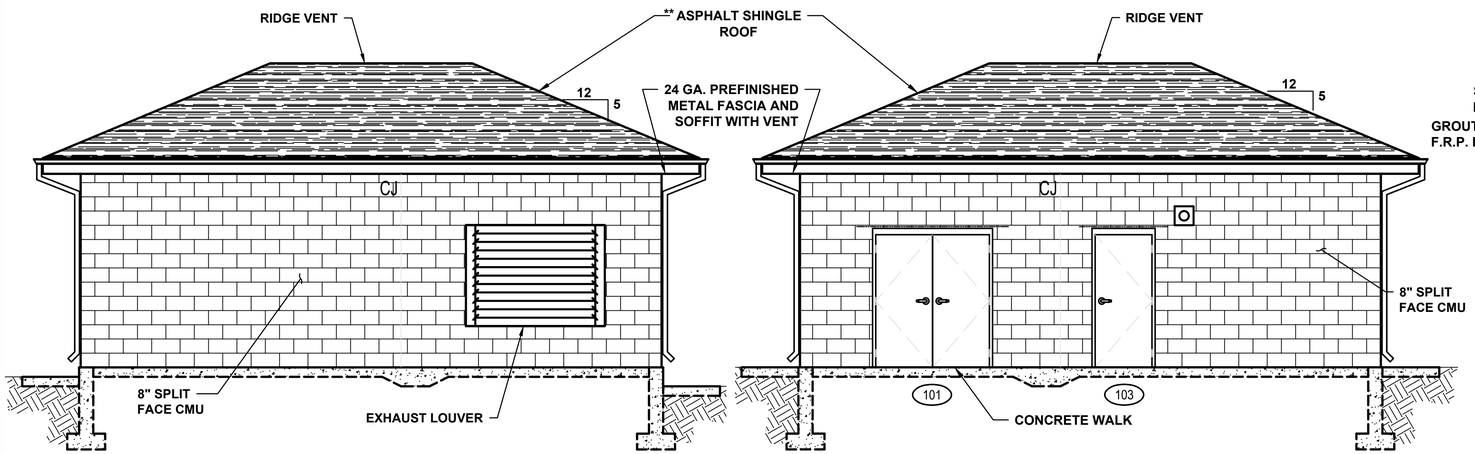

NORTH ELEVATION

0 1' 2' 4' 8'
SCALE 1/4" = 1'

** ALTERNATE BID ITEM: STANDING SEAM METAL ROOF OVER SELF-ADHERED ICE & WATER SHIELD.

SOUTH ELEVATION

0 1' 2' 4' 8'
SCALE 1/4" = 1'

* TOP COURSE SHALL HAVE SMOOTH FACE OF SAME COLOR AS SPLIT-FACED BLOCK

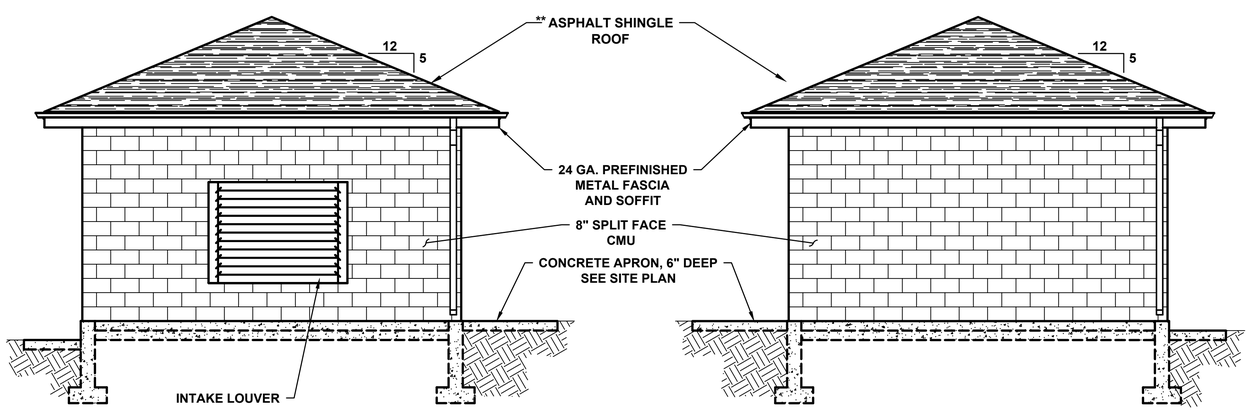

WEST ELEVATION

0 1' 2' 4' 8'
SCALE 1/4" = 1'

EAST ELEVATION

0 1' 2' 4' 8'
SCALE 1/4" = 1'

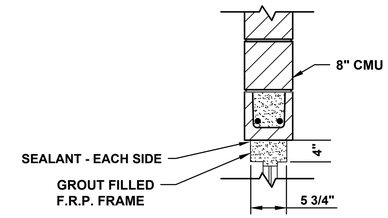

INTERIOR DOOR HEAD DTL

0 1' 2'
SCALE 1" = 1'

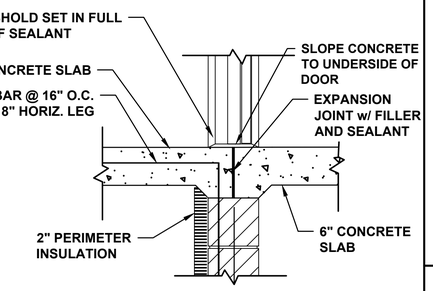

EXTERIOR DOOR SILL DTL

0 1' 2'
SCALE 1" = 1'

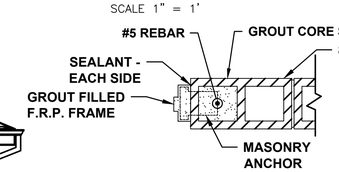

INTERIOR DOOR JAMB DTL

0 1' 2'
SCALE 1" = 1'

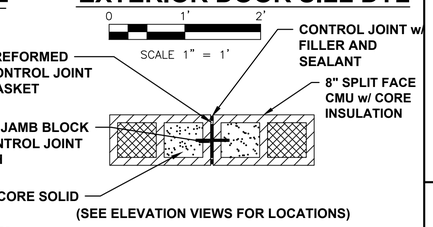

(SEE ELEVATION VIEWS FOR LOCATIONS)

CONTROL JOINT DTL

0 1' 2'
SCALE 1" = 1'

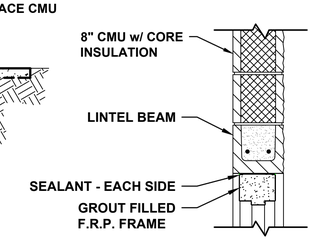

EXTERIOR DOOR HEAD DTL

0 1' 2'
SCALE 1" = 1'

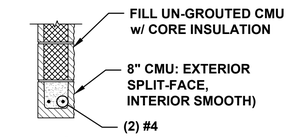

L1

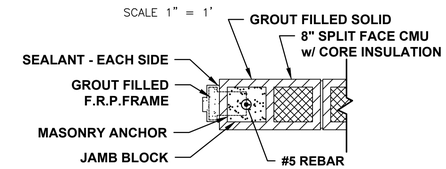

EXTERIOR DOOR JAMB DTL

0 1' 2'
SCALE 1" = 1'

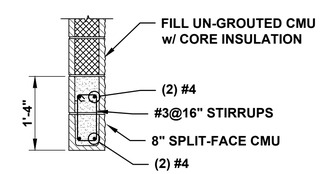

L2

LINTEL DETAILS

0 1' 2' 3'
SCALE 3/4" = 1'

ClarkDietz
500 N. 3RD STREET
SUITE 275
WAUSAU, WI 54403
PHONE : 715.845.1333 www.clarkdietz.com

90% SUBMITTAL
NOT FOR CONSTRUCTION

PROJECT TITLE
CITY OF NEW BERLIN
WESTRIDGE LIFT STATION REHABILITATION
WAUKESHA COUNTY, WI

DESIGNED BY: DLT
DRAWN BY: IWD
CHECKED BY: TSW
DATE CHECKED: 11/23/21

DATE	REVISION
11/29/21	90% SET
09/30/21	50% SET

DRAWING TITLE
STRUCTURAL ELEVATION PLAN

PROJECT No.
N0430020

DRAWING No.
S-102

DWG 12 OF 31 DWGS

NOTE: DIMENSIONAL DATA IS NOT TO BE OBTAINED BY SCALING ANY PORTION OF THIS DRAWING.

PLOT DATE 11/30/2021 9:49 AM
P:\N0430020_NEW BERLIN - WESTRIDGE LIFT STATION REHA\DESIGN\CAD\SHEETS\07-STRUCTURAL\S-PLAN.DWG ISAAC W. DOLAN SAVE TIME 11/29/2021 1:00:03 PM

** ALTERNATE BID ITEM
STANDING SEAM METAL ROOF OVER SELF-ADHERED ICE & WATER SHIELD.

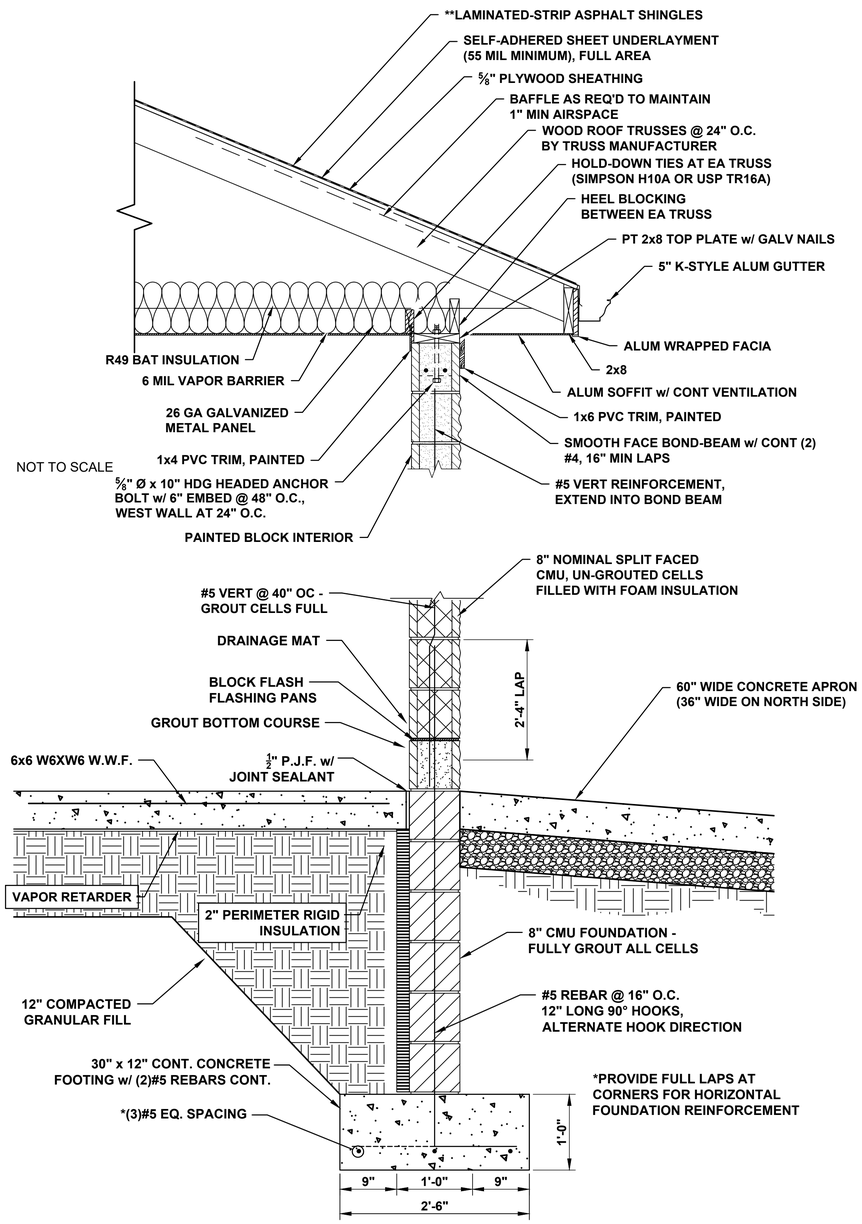

TYP. WALL SECTION

0 1' 2'
SCALE 1" = 1'

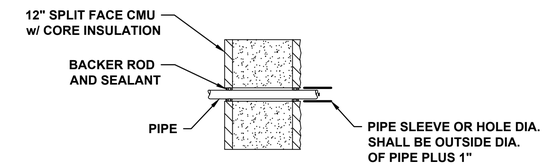

TYPICAL SLEEVE @ BLOCK WALL

0 1' 2'
SCALE 1" = 1'

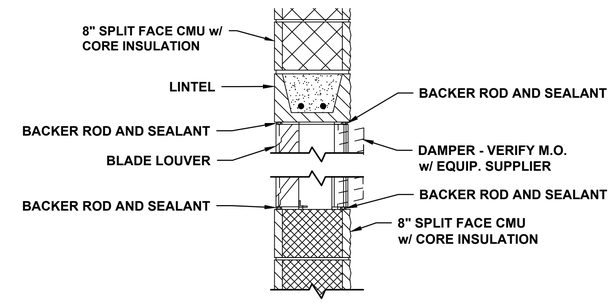

LOUVER DETAIL

0 1' 2'
SCALE 1" = 1'

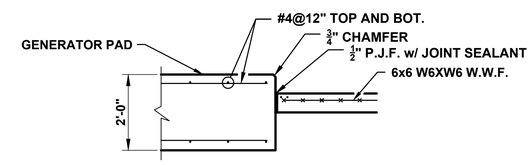

GENERATOR PAD DETAIL

0 1' 2' 4'
SCALE 1/2" = 1'

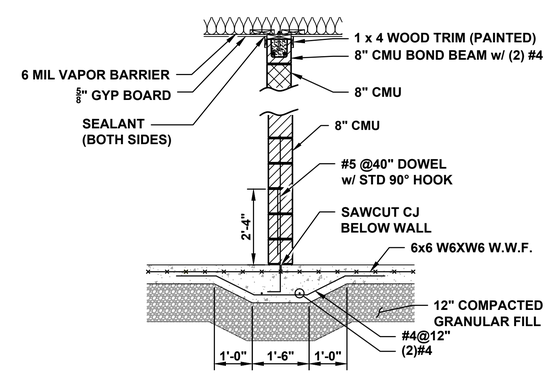

PARTITION INTERIOR WALL SECTION

0 1' 2' 4'
SCALE 1/2" = 1'

ClarkDietz
500 N. 3RD STREET
SUITE 200
WAUSAU, WI 54403
PHONE : 715.845.1333 www.clarkdietz.com

90% SUBMITTAL
NOT FOR CONSTRUCTION

PROJECT TITLE
CITY OF NEW BERLIN
WESTRIDGE LIFT STATION REHABILITATION
WAUKESHA COUNTY, WI

DESIGNED BY:	DLT
DRAWN BY:	IWD
CHECKED BY:	TSW
DATE CHECKED:	11/23/21

DATE	REVISION
11/29/21	90% SET
09/30/21	50% SET

DRAWING TITLE
STRUCTURAL SECTION PLAN

PROJECT No.
N0430020

DRAWING No.
S-103

DWG 13 OF 31 DWGS

NOTE: DIMENSIONAL DATA IS NOT TO BE OBTAINED BY SCALING ANY PORTION OF THIS DRAWING.

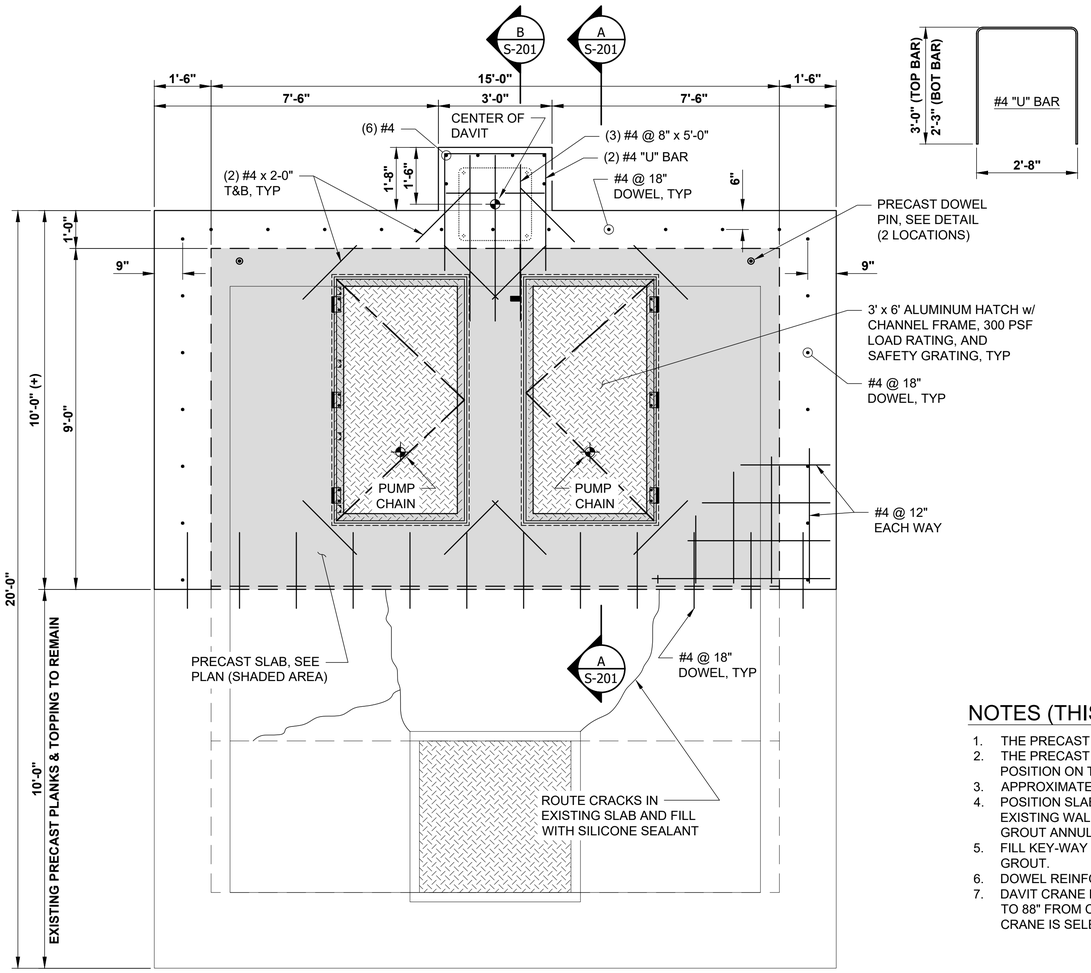

WET WELL COVER

0 1' 2' 4'

SCALE 1/2" = 1'

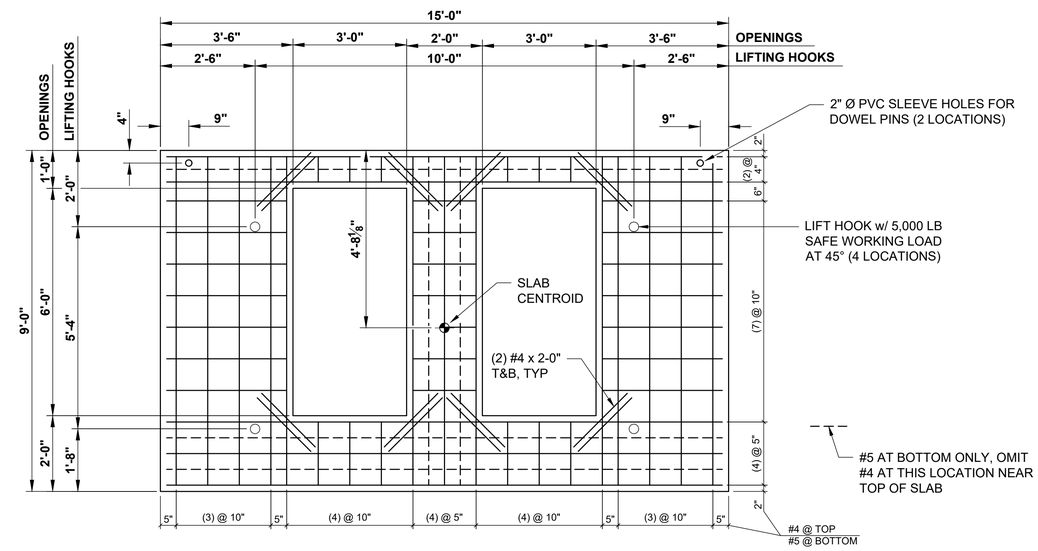

DETAIL - PRECAST SLAB

(PLAN VIEW)

NOTES (THIS DRAWING)

1. THE PRECAST SLAB AND CONCRETE TOPPING IS DESIGNED TO SUPPORT 300 PSF LIVE LOAD.
2. THE PRECAST SLAB MAY BE CAST ON-SITE USING CLASS A CONCRETE AND MOVED INTO POSITION ON THE WET-WELL.
3. APPROXIMATE WEIGHT OF PRECAST SLAB = 9,900 LBS.
4. POSITION SLAB TO ABUT THE EXISTING PRECAST PLANK. AFTER POSITIONING DRILL TOP OF EXISTING WALL AND INSTALL (2) EPOXY EMBEDDED DOWELS THROUGH HOLES IN PRECAST SLAB. GROUT ANNULAR SPACE AROUND BAR WITH NON-SHRINK GROUT.
5. FILL KEY-WAY BETWEEN PRECAST PLANK AND EXISTING PRECAST PLANK WITH NON-SHRINK GROUT.
6. DOWEL REINFORCING BARS INTO EXISTING CONCRETE WALLS AND TOPPING AS SHOWN.
7. DAVIT CRANE LOCATION IS BASED ON MODEL CAPTAIN 2500 BY THERN WITH A DISTANCE OF 80" TO 88" FROM CENTER OF CRANE TO PUMP CHAIN. NOTIFY ENGINEER IF DIFFERENT MODEL OF CRANE IS SELECTED AS LOCATION OF DAVIT CRANE MAY NEED TO BE REVISED.

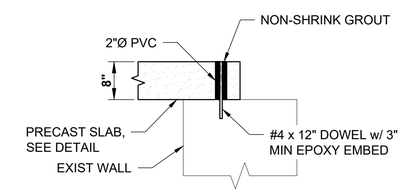

PIN DETAIL

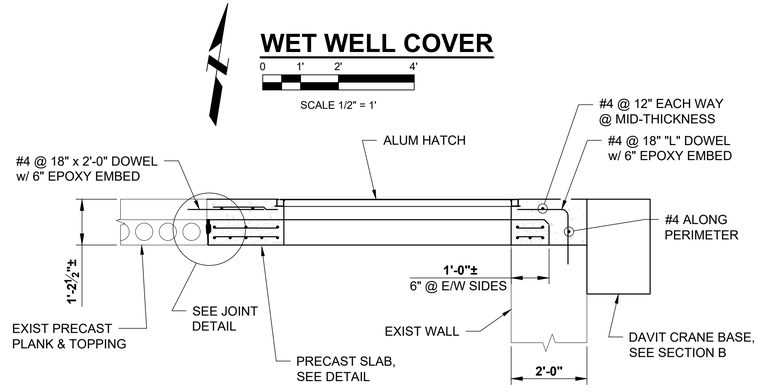

SECTION A-A

0 1' 2' 4'

SCALE 1/2" = 1'

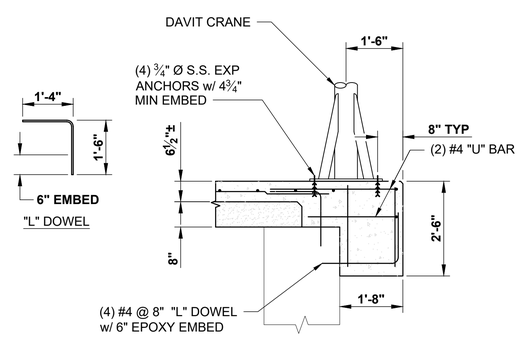

SECTION B

0 1' 2' 4'

SCALE 1/2" = 1'

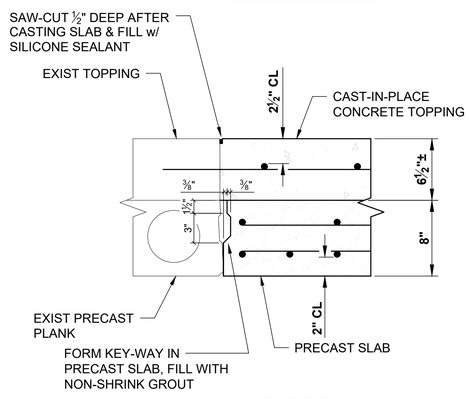

JOINT DETAIL

ClarkDietz
500 N. 3RD STREET
SUITE 270
WAUSAU, WI 54403
PHONE : 715.845.1333 www.clarkdietz.com

90% SUBMITTAL
NOT FOR CONSTRUCTION

PROJECT TITLE
CITY OF NEW BERLIN
WESTRIDGE LIFT STATION REHABILITATION
WAUKESHA COUNTY, WI

DESIGNED BY:	SMM
DRAWN BY:	SMM
CHECKED BY:	TSW
DATE CHECKED:	11/23/21

DATE	REVISION
11/29/21	90% SET
09/30/21	50% SET

DRAWING TITLE
WET WELL COVER STRUCTURAL DETAILS

PROJECT No.
N0430020

DRAWING No.
S-201

DWG 14 OF 31 DWGS

NOTE: DIMENSIONAL DATA IS NOT TO BE OBTAINED BY SCALING ANY PORTION OF THIS DRAWING.

PLOT DATE 11/30/2021 9:49 AM
P:\N0430020_NEW BERLIN - WESTRIDGE LIFT STATION REHA\DESIGN\CAD\SHEETS\07-STRUCTURAL\S-PLAN.DWG ISAAC W. DOLAN SAVE TIME 11/29/2021 1:00:03 PM

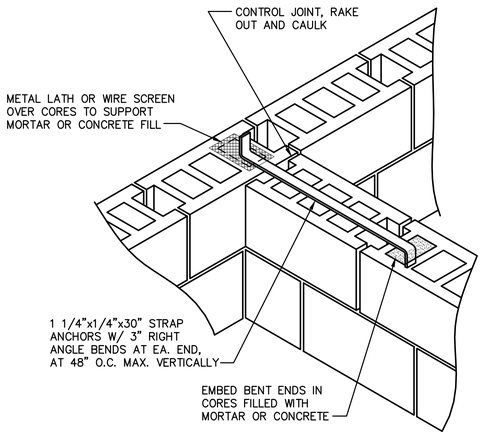

WALL TO WALL ANCHORAGE INTERSECTION OF BEARING WALLS

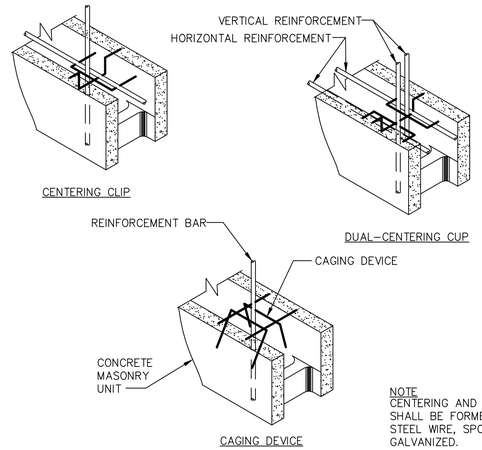

NOTE
CENTERING AND CAGING DEVICES SHALL BE FORMED FROM #9 HARD STEEL WIRE, SPOT WELDED AND GALVANIZED.

CENTERING AND CAGING DEVICES

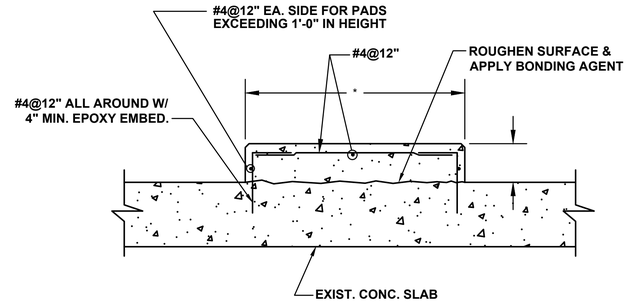

* PAD SIZE TO BE DETERMINED FROM EQUIPMENT MANUFACTURER'S APPROVED SHOP DRAWINGS.

HOUSE KEEPING PAD

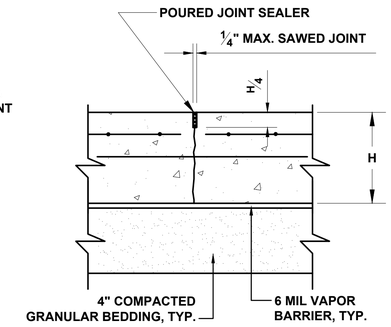

NOTE: AT THE CONTRACTOR'S OPTION "STRESS LOCK" PLASTIC CONTROL JOINT OR APPROVED EQUAL MAY BE USED INSTEAD OF SAWED JOINT.

CONTRACTION JOINT IN SLABS

SLAB THICKNESS	DOWEL DIA. AND LENGTH	DOWEL SPACING
5"-6"	3/4"Ø x 16"	12"
7"-8"	1"Ø x 18"	12"
9"-11"	1 1/4"Ø x18"	12"
12"	1 3/8"Ø x 18"	12"

SLAB ON GRADE JOINT DETAILS

FOR BUILDING SLAB ONLY.

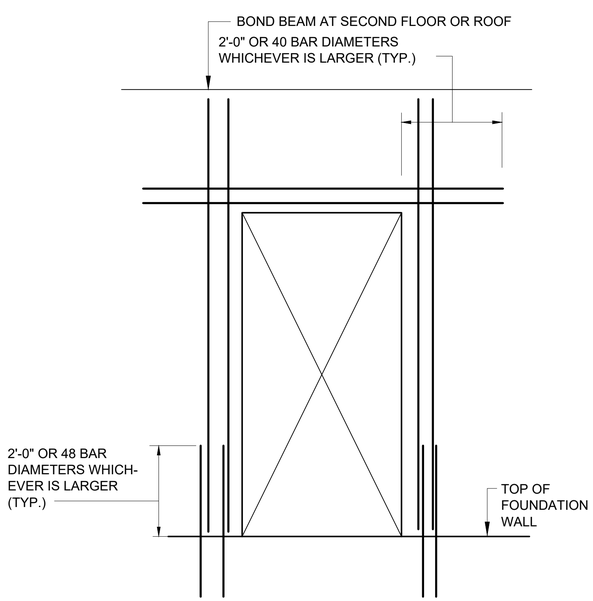

REINFORCEMENT AROUND DOOR OPENING IN C.M.U.

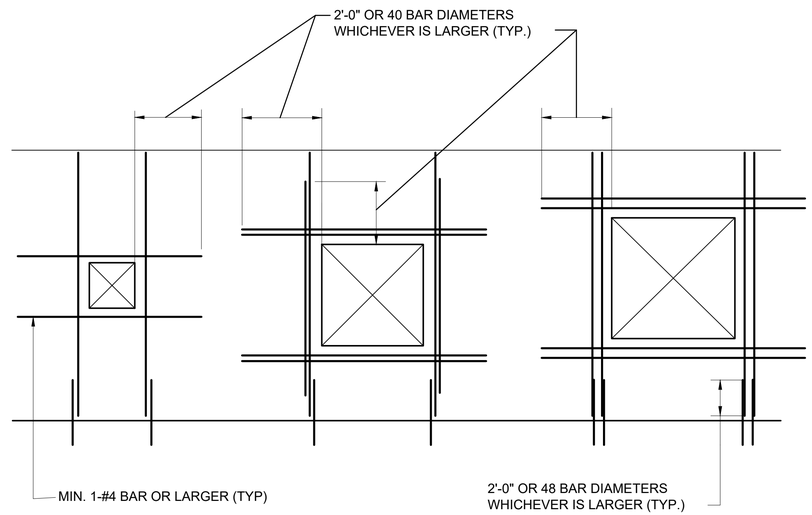

CASE 1
APPLIES TO (1) ALL OPENINGS 16" OR LARGER IN EITHER DIRECTION IN NON-STRUCTURAL PARTITIONS AND (2) ANY OPENING 16" TO 24" IN EITHER DIRECTION IN STRUCTURAL PARTITION OR EXTERIOR WALL

CASE 2
APPLIES TO STRUCTURAL PARTITION AND EXTERIOR WALLS WHEN OPENING EXCEEDS 2' BUT NOT MORE THAN 4' IN EITHER DIRECTION.

CASE 3
APPLIES TO STRUCTURAL PARTITION AND EXTERIOR WALLS WHEN OPENING EXCEEDS 4' IN EITHER DIRECTION.

NOTES:

1. FOR VERTICAL REINFORCEMENT OF BARS, EA. BAR SHALL BE PLACED IN A SEPARATE CELL.
2. VERTICAL BARS SHALL BE BARS OF THE SAME SIZE, EXTENT, AND ANCHORAGE AS THE TYPICAL REINFORCEMENT IN THAT WALL UNLESS OTHERWISE NOTED.
3. VERTICAL REINFORCEMENT BARS CAN BE PART OF THE NORMAL VERTICAL REINFORCEMENT.

REINFORCEMENT AROUND WALL OPENINGS IN C.M.U.

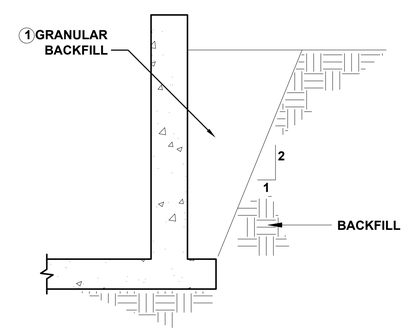

BACKFILL DETAIL

TYPICAL ALL STRUCTURES UNLESS SHOWN OTHERWISE

1 COMPACT TO 95% DENSITY (ASTM D698) IF PAVEMENT OR STRUCTURE IS PLACED ON OR OVER GRANULAR BACKFILL. 90% DENSITY (ASTM D698) IS SUITABLE FOR LANDSCAPED AREAS.

ClarkDietz
500 N. 3RD STREET
SUITE 270
WAUSAU, WI 54403
PHONE : 715.845.1333 www.clarkdietz.com

90% SUBMITTAL
NOT FOR CONSTRUCTION

PROJECT TITLE
CITY OF NEW BERLIN
WESTRIDGE LIFT STATION REHABILITATION
WAUKESHA COUNTY, WI

DESIGNED BY: DLT
DRAWN BY: IWD
CHECKED BY: TSW
DATE CHECKED: 11/23/21

DATE	REVISION
11/29/21	90% SET
09/30/21	50% SET

DRAWING TITLE
STRUCTURAL DETAILS

PROJECT No.
N0430020

DRAWING No.
S-501

DWG 15 OF 31 DWGS

NOTE: DIMENSIONAL DATA IS NOT TO BE OBTAINED BY SCALING ANY PORTION OF THIS DRAWING.

P:\N0430020_NEW BERLIN - WESTRIDGE LIFT STATION REHA\DESIGN\CAD\SHEETS\07-STRUCTURAL\S-DETAILS.DWG ISAAC W. DOLAN SAVE TIME 11/29/2021 11:16:57 AM PLOT DATE 11/30/2021 9:49 AM

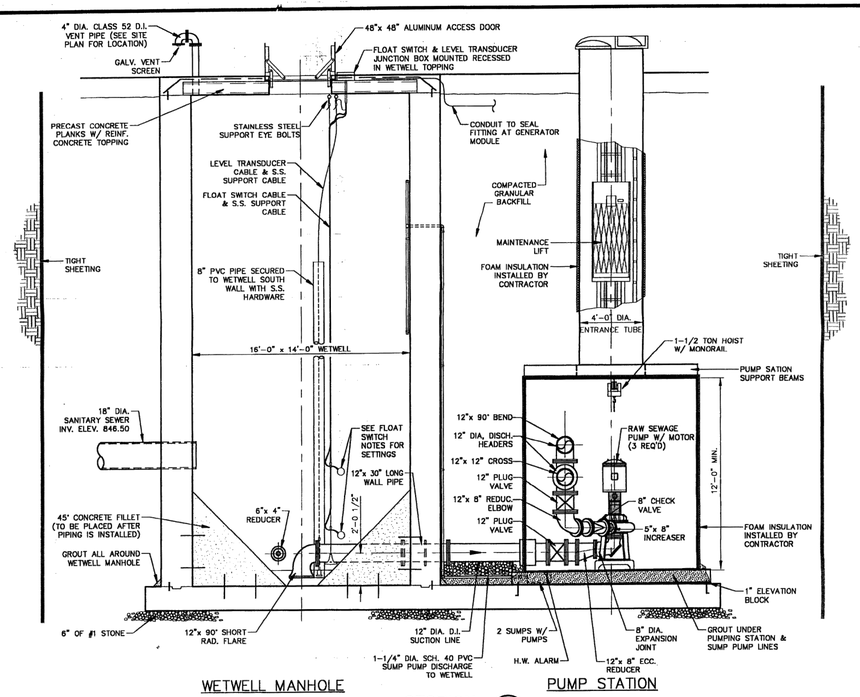

SECTION 1/2
SCALE: 1/4"=1'-0"
CWRPSEC1

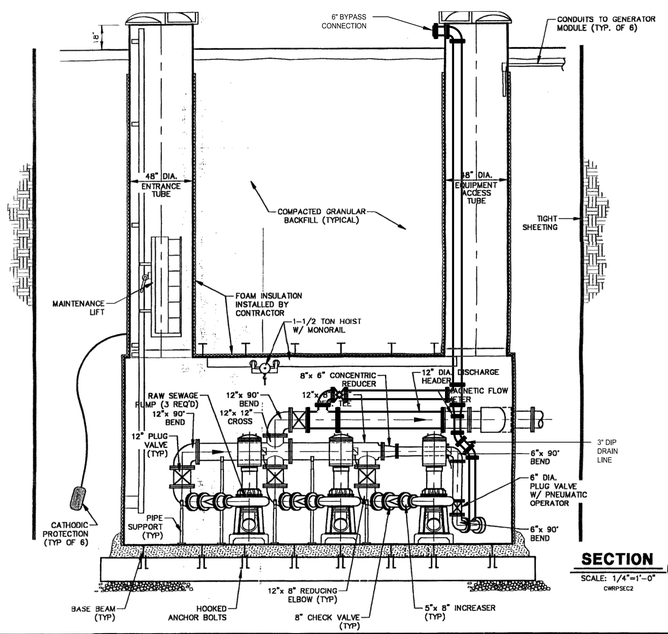

SECTION 2/2
SCALE: 1/4"=1'-0"
CWRPSEC2

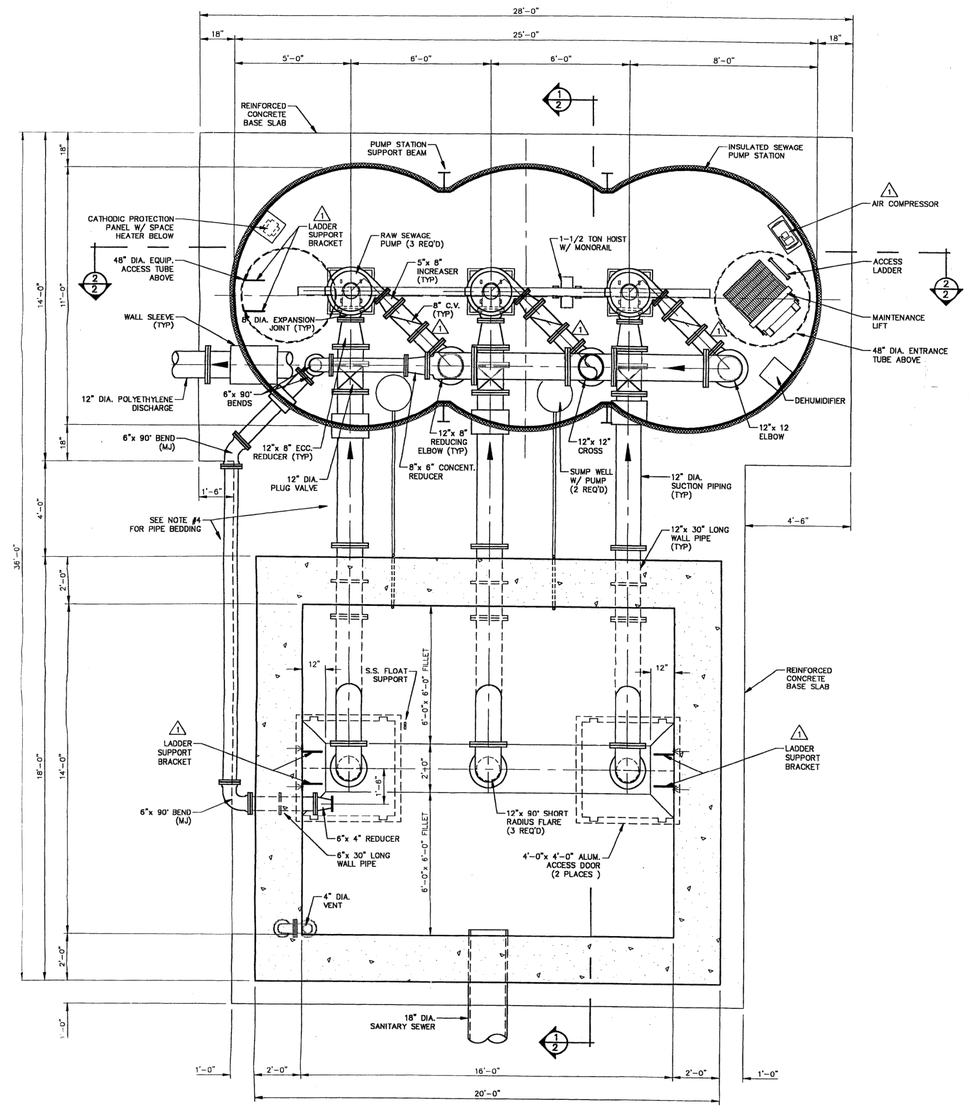

SEWAGE PUMP STATION AND WETWELL
SCALE: 3/8"=1'-0"
CPSWWPLN

NOTES:

1) ALL HARDWARE IN WETWELL SHALL BE STAINLESS STEEL.
2) SOME PIPING AND EQUIPMENT HAVE BEEN SHOWN OUT OF POSITION FOR CLARITY, SEE PLAN VIEW FOR ACTUAL POSITION.
3) BACKFILL WITH COMPACTED GRANULAR BACKFILL IN 12" LIFTS (MAXIMUM).
4) SUPPORT PIPES ON #1 CRUSHED STONE.

FLOAT SWITCH ELEVATIONS

"FLT1" HIGH WATER ALARM/ _ _ _ ELEV. 846.50
BACKUP PUMP ON

"FLT2" LOW WATER ALARM/ _ _ _ ELEV. 842.50
BACKUP PUMP OFF

1	09-23-94	ADD AIR COMPRESSOR
		ADD LADDER SUPPORT BRACKETS
		ADD SPOOL TO DISCHARGE PIPING
		REVISIONS

Ruekert | Mielke
Professional Engineers
Registered Land Surveyors
N239 N1812 Rockwood Drive
Waukesha, Wisconsin 53188 (414) 542-5733

SEWAGE PUMP STATION
PLAN AND SECTIONS
WESTRIDGE SEWAGE PUMP STATION
CITY OF NEW BERLIN
WAUKESHA COUNTY, WISCONSIN

© COPYRIGHT 1994
RUEKERT & MIELKE INC.

DESIGNED BY: T.R.R.
DRAFTED BY: J.M.C.
CHECKED BY:
DATE: AUGUST, 1994
SCALE: AS NOTED

PROJECT NO. 14-90166.05 0
CWRPSH11

SHEET NO. 2 OF 6

9-26-94

ENT'D

Clark Dietz
500 N. 3RD STREET
SUITE 700
WAUSAU, WI 54403
PHONE : 715.845.1333 www.clarkdietz.com

90% SUBMITTAL
NOT FOR CONSTRUCTION

PROJECT TITLE
CITY OF NEW BERLIN
WESTRIDGE LIFT STATION
REHABILITATION
WAUKESHA COUNTY, WI

DESIGNED BY: DLT
DRAWN BY: IWD
CHECKED BY: TSW
DATE CHECKED: 11/23/21

DATE	REVISION
11/29/21	90% SET
09/30/21	50% SET

DRAWING TITLE
EXISTING LIFT STATION AND WET WELL SECTIONS

PROJECT No.
N0430020

DRAWING No.
M-101

DWG 16 OF 31 DWGS

NOTE: DIMENSIONAL DATA IS NOT TO BE OBTAINED BY SCALING ANY PORTION OF THIS DRAWING.

P:\N0430020_NEW BERLIN - WESTRIDGE LIFT STATION REHA\DESIGN\CAD\SHEETS\14-MECHANICAL\M-SECTIONS.DWG ISAAC W. DOLAN SAVE TIME 11/30/2021 9:34:06 AM PLOT DATE 11/30/2021 9:49 AM

PIPING SCHEDULE*

	DESCRIPTION	DIAMETER (IN)	LENGTH (IN) (VERIFY)	REMARKS
1	SPOOL	12	---	VERTICAL LINE FROM WET WELL PIPING
2	90° BEND	12	12.00	PRESSURE GAUGE WITH TAP
3	CHECK VALVE	12	27.50	---
4	PLUG VALVE	12	14.00	---
5	90° BEND	12	12.00	---
6	EXPANSION JOINT	12	8.00	WITH 2 CONTROL RODS AND GUSSET PLATES
7	TEE	12	24.00	WITH AIR RELEASE ASSEMBLY
8	PLUG VALVE	12	14.00	---
9	SPOOL	12	108.00	THROUGH BUILDING WALL WITH SLEEVE
10	BLIND FLANGE	12	---	WITH 4-INCH TAP AND QUICK CONNECT CAP
11	EXPANSION JOINT	12	8.00	WITH 2 CONTROL RODS AND GUSSET PLATES
12	TEE	12	24.00	---
13	PLUG VALVE	12	14.00	---
14	CHECK VALVE	12	27.50	---
15	90° BEND	12	12.00	PRESSURE GAUGE WITH TAP
16	SPOOL	12	6.00	VERTICAL LINE FROM WET WELL PIPING
17	EXPANSION JOINT	12	8.00	WITH 2 CONTROL RODS AND GUSSET PLATES
18	90° BEND	12	12.00	PRESSURE GAUGE WITH TAP
19	SPOOL	12	12.00	---
20	MAG METER	12	19.70	---
21	90° BEND	12	12.00	PRESSURE GAUGE WITH TAP
22	PLUG VALVE	12	14.00	---
23	SPOOL	12	---	VERTICAL LINE TO FORCE MAIN DISCHARGE

* THIS LISTING IS INTENDED TO BE A GENERAL PIPE AND VALVE LISTING. ANY OMISSION FROM THIS LISTING OF ANY PIPES AND VALVES SHOWN ON THE CONTRACT DRAWINGS OR THAT MAY BE REASONABLY REQUIRED FOR A COMPLETE OPERATING FACILITY DOES NOT RELIEVE THE CONTRACTOR OF THE RESPONSIBILITY TO FURNISH THESE ITEMS.

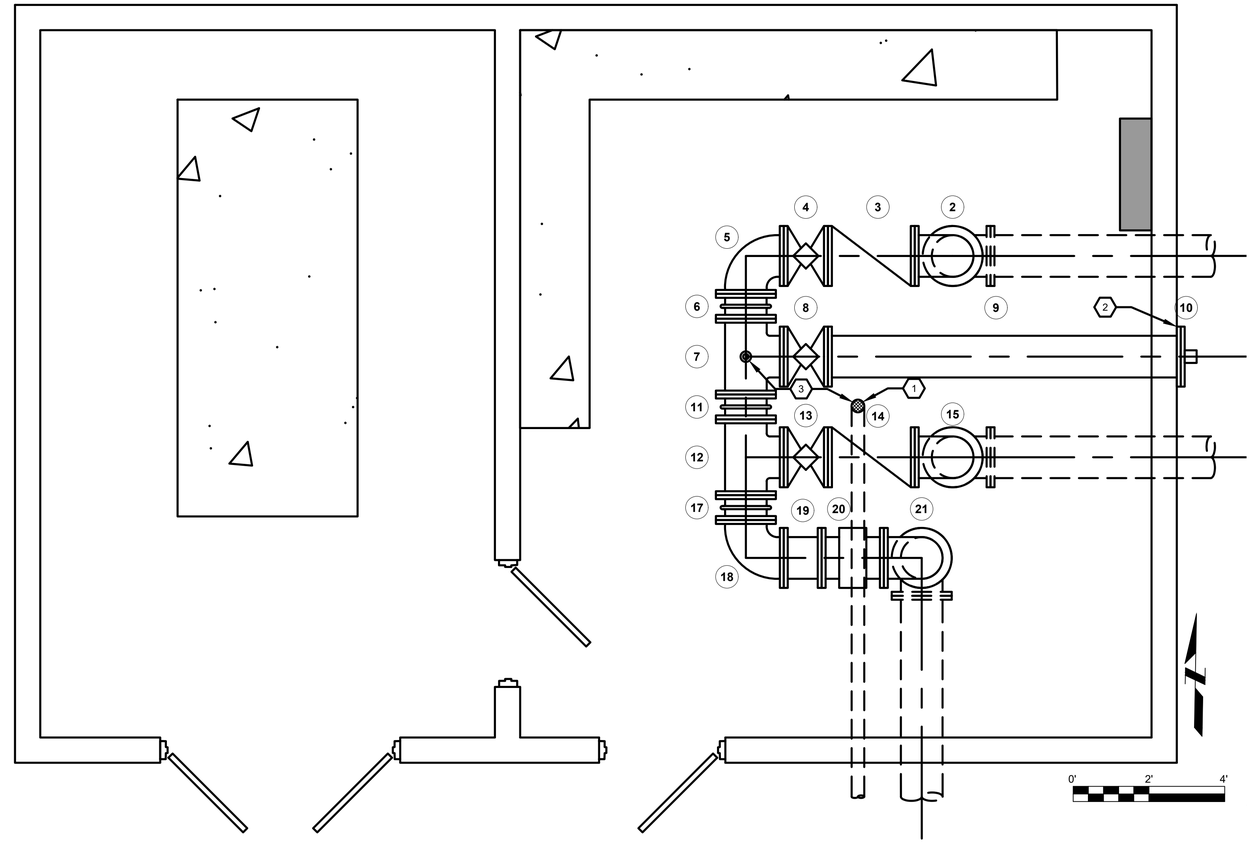

INTERIOR PIPING PLAN VIEW

GENERAL NOTES

A. ALL PIPE SUPPORTS ARE NOT SHOWN FOR CLARITY. CONTRACTOR SHALL SUPPORT PIPES AS REQUIRED PER THE MANUFACTURER'S RECOMMENDATIONS AND PER THE TECHNICAL SPECIFICATIONS.

B. ALL INTERIOR PIPE AND FITTINGS SHALL BE FLANGED DUCTILE IRON, COATED AS SPECIFIED. FASTENING BOLTS AND NUTS SHALL BE STAINLESS STEEL.

C. SEE SPECIFICATIONS FOR PIPE FITTING AND VALVE DETAILS.

KEY NOTES

1. FLOOR DRAIN WITH VENT. PLUMB TO WET WELL.
2. EXTEND SPOOL THROUGH BUILDING WALL SO CONNECTOR IS ON EXTERIOR OF BUILDING. SEAL PIPE PENETRATION.
3. PLUMB AIR RELEASE VALVE DISCHARGE TO FLOOR DRAIN.
4. INSTALL AIR CONDITIONER.

ClarkDietz
500 N. 3RD STREET
SUITE 200
WAUSAU, WI 54403
PHONE : 715.845.1333 www.clarkdietz.com

90% SUBMITTAL
NOT FOR CONSTRUCTION

PROJECT TITLE
CITY OF NEW BERLIN
WESTRIDGE LIFT STATION REHABILITATION
WAUKESHA COUNTY, WI

DESIGNED BY: DLT
DRAWN BY: IWD
CHECKED BY: TSW
DATE CHECKED: 11/23/21

DATE	REVISION
11/29/21	90% SET
09/30/21	50% SET

DRAWING TITLE
LIFT STATION PIPING PLAN

PROJECT No.
N0430020

DRAWING No.
M-102

DWG 17 OF 31 DWGS

NOTE: DIMENSIONAL DATA IS NOT TO BE OBTAINED BY SCALING ANY PORTION OF THIS DRAWING.

PLOT DATE 11/30/2021 9:50 AM
P:\N0430020_NEW BERLIN - WESTRIDGE LIFT STATION REHA\DESIGN\CAD\SHEETS\14-MECHANICAL\M-PLAN-PROCESSPIPING.DWG ISAAC W. DOLAN SAVE TIME 11/29/2021 11:17:15 AM

PLOT DATE 11/30/2021 9:50 AM
P:\N0430020_NEW BERLIN - WESTRIDGE LIFT STATION REHA\DESIGN\CAD\SHEETS\14-MECHANICAL\M-SECTIONS.DWG ISAAC W. DOLAN SAVE TIME 11/30/2021 9:34:06 AM

ATTACH TO OUTSIDE OF WET WELL COVER

CAUTION
DANGEROUS/HAZARDOUS GASES
LEVEL 2 CONFINED SPACE
DO NOT ENTER WITHOUT
PROPER EQUIPMENT AND
SUPERVISION

EXAMPLE OF WARNING LABEL

10" X 14" LABEL, BLACK LETTERS
(1 INCH) ON YELLOW BACKGROUND

PIPING SCHEDULE*

	DESCRIPTION	DIAMETER (IN)	LENGTH (IN) (VERIFY)	REMARKS
1	SPOOL	12	---	VERTICAL LINE FROM WET WELL PIPING
2	90° BEND	12	12.00	PRESSURE GAUGE WITH TAP
3	CHECK VALVE	12	27.50	---
4	PLUG VALVE	12	14.00	---
5	90° BEND	12	12.00	---
6	EXPANSION JOINT	12	8.00	WITH 2 CONTROL RODS AND GUSSET PLATES
7	TEE	12	24.00	WITH AIR RELEASE ASSEMBLY
8	PLUG VALVE	12	14.00	---
9	SPOOL	12	108.00	THROUGH BUILDING WALL WITH SLEEVE
10	BLIND FLANGE	12	---	WITH 4-INCH TAP AND QUICK CONNECT CAP
11	EXPANSION JOINT	12	8.00	WITH 2 CONTROL RODS AND GUSSET PLATES
12	TEE	12	24.00	---
13	PLUG VALVE	12	14.00	---
14	CHECK VALVE	12	27.50	---
15	90° BEND	12	12.00	PRESSURE GAUGE WITH TAP
16	SPOOL	12	6.00	VERTICAL LINE FROM WET WELL PIPING
17	EXPANSION JOINT	12	8.00	WITH 2 CONTROL RODS AND GUSSET PLATES
18	90° BEND	12	12.00	PRESSURE GAUGE WITH TAP
19	SPOOL	12	12.00	---
20	MAG METER	12	19.70	---
21	90° BEND	12	12.00	PRESSURE GAUGE WITH TAP
22	PLUG VALVE	12	14.00	---
23	SPOOL	12	---	VERTICAL LINE TO FORCE MAIN DISCHARGE

* THIS LISTING IS INTENDED TO BE A GENERAL PIPE AND VALVE LISTING. ANY OMISSION FROM THIS LISTING OF ANY PIPES AND VALVES SHOWN ON THE CONTRACT DRAWINGS OR THAT MAY BE REASONABLY REQUIRED FOR A COMPLETE OPERATING FACILITY DOES NOT RELIEVE THE CONTRACTOR OF THE RESPONSIBILITY TO FURNISH THESE ITEMS.

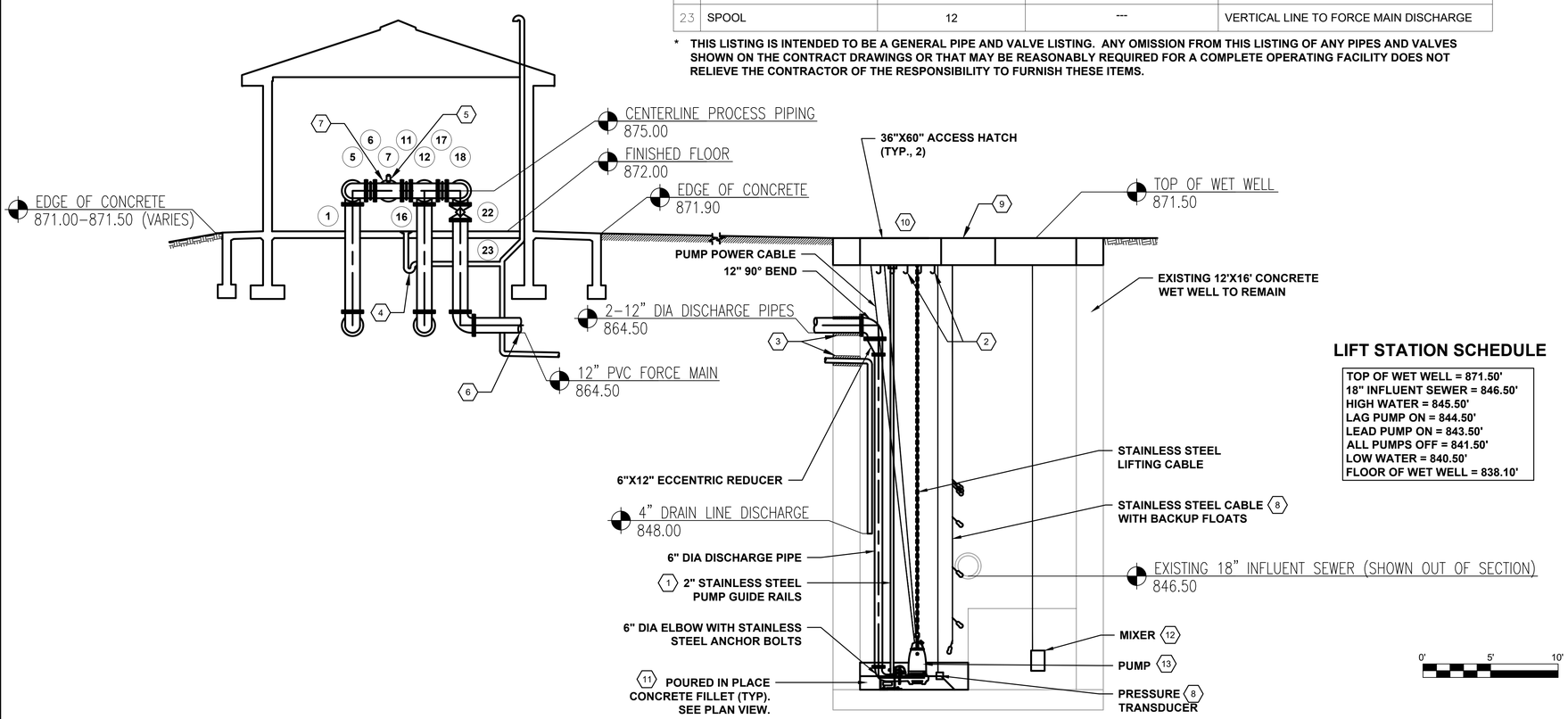

LIFT STATION SCHEDULE

TOP OF WET WELL = 871.50'
18" INFLUENT SEWER = 846.50'
HIGH WATER = 845.50'
LAG PUMP ON = 844.50'
LEAD PUMP ON = 843.50'
ALL PUMPS OFF = 841.50'
LOW WATER = 840.50'
FLOOR OF WET WELL = 838.10'

GENERAL NOTES

A. ALL PIPE SUPPORTS ARE NOT SHOWN FOR CLARITY. CONTRACTOR SHALL SUPPORT PIPES AS REQUIRED PER THE MANUFACTURER'S RECOMMENDATIONS AND PER THE TECHNICAL SPECIFICATIONS.

B. ALL INTERIOR PIPE AND FITTINGS SHALL BE FLANGED DUCTILE IRON, COATED AS SPECIFIED. FASTENING BOLTS AND NUTS SHALL BE STAINLESS STEEL.

C. SEE SPECIFICATIONS FOR PIPE FITTING AND VALVE DETAILS.

D. ALL PIPING AND GUIDE RAILS IN THE WET WELL SHALL BE PROVIDED BY THE CONTRACTOR.

E. TRANSDUCER AND FLOAT CABLES SHALL BE ACCESSIBLE FROM HATCH WITHOUT ENTRY INTO WET WELL.

KEY NOTES

1. INSTALL INTERMEDIATE GUIDE RAIL BRACKETS AS RECOMMENDED BY MANUFACTURER.
2. INSTALL TEN (10) CABLE MOUNTING HOOKS AT EACH ACCESS HATCH.
3. PROVIDE MODULAR ELASTOMER SEAL (LINK SEALS OR APPROVED EQUAL) AT ALL PIPE PENETRATION LOCATIONS IN WET WELL AND THROUGH CONCRETE FLOOR (TYP.).
4. CONSTRUCT FLOOR DRAIN IN ACCORDANCE WITH STATE OF WISCONSIN PUMBING CODE. PLACE 4-INCH DRAIN IN THE CENTER OF THE MECHANICAL ROOM WITH VENT AND DRAIN PIPE. DRAIN SHALL EMPTY INTO THE WET WELL.
5. PLUMB AIR RELEASE DISCHARGE TO FLOOR DRAIN.
6. CONNECT TO EXISTING 12-INCH C-900 PVC FORCE MAIN. CONTRACTOR TO VERIFY ELEVATION.
7. EXTEND SPOOL THROUGH BUILDING WALL SO CONNECTOR IS ON EXTERIOR OF BUILDING. SEAL PIPE PENETRATION.
8. PRESSURE TRANSDUCER AND BACKUP FLOATS TO BE REPLACED IN KIND.
9. REPLACE (OR REPAIR) CONCRETE COVER IN KIND. WORK TO INCLUDE NEW 4-INCH VENT.
10. ACCESS HATCHES WITH SAFETY GRATES.
11. INSTALL NEW CONCRETE FILLET.
12. INSTALL NEW SUBMERSIBLE MIXER AT EXISTING HATCH.
13. INSTALL TWO (2) NEW SUBMERSIBLE PUMPS AS SPECIFIED.

ClarkDietz
500 N. 3RD STREET
SUITE 270
WAUSAU, WI 54403
PHONE : 715.845.1333 www.clarkdietz.com

90% SUBMITTAL
NOT FOR CONSTRUCTION

PROJECT TITLE
CITY OF NEW BERLIN
WESTRIDGE LIFT STATION REHABILITATION
WAUKESHA COUNTY, WI

DESIGNED BY: DLT
DRAWN BY: IWD
CHECKED BY: TSW
DATE CHECKED: 11/23/21

DATE	REVISION
11/29/21	90% SET
09/30/21	50% SET

DRAWING TITLE
LIFT STATION AND WET WELL SECTIONS

PROJECT No.
N0430020

DRAWING No.
M-103

DWG 18 OF 31 DWGS

NOTE: DIMENSIONAL DATA IS NOT TO BE OBTAINED BY SCALING ANY PORTION OF THIS DRAWING.

ELECTRICAL GENERAL NOTES

1. ALL WORK SHALL CONFORM TO THE REQUIREMENTS OF THE CURRENT EDITION OF THE NATIONAL ELECTRICAL CODE, THE MOST CURRENT EDITION OF THE NATIONAL ELECTRICAL SAFETY CODE, AND ALL APPLICABLE LOCAL ORDINANCES.
2. CONTRACTOR SHALL FURNISH ALL MATERIALS FOR A COMPLETE AND WORKABLE SYSTEM.
3. CONTRACTOR SHALL BE RESPONSIBLE FOR OBTAINING ALL REQUIRED PERMITS AND FOR PROVIDING ALL SUPERVISION, LABOR AND TOOLS FOR THE PROJECT.
4. ALL WORK IS TO CONFORM TO A TIME SCHEDULE TO BE ESTABLISHED BY THE OWNER.
5. CONTRACTOR SHALL COORDINATE THE WORK SCHEDULE WITH THE OWNER AND OBTAIN THE OWNER'S APPROVAL BEFORE ANY WORK INVOLVING A SHUTDOWN IS DONE.
6. ALL MATERIALS FURNISHED BY THE CONTRACTOR ARE TO BE NEW AND APPROVED BY THE OWNER AS TO MANUFACTURER AND TYPE.
7. ALL CONDUITS SHALL BE PROVIDED WITH AN INSULATED COPPER EQUIPMENT GROUNDING CONDUCTOR SIZED IN ACCORDANCE WITH THE CURRENT EDITION OF THE NATIONAL ELECTRICAL CODE.
8. ALL LOCATIONS AND DIMENSIONS SHOWN ARE APPROXIMATE. CONTRACTOR SHALL FIELD VERIFY ALL ELECTRICAL EQUIPMENT LOCATIONS AND EQUIPMENT DIMENSIONS. CONTRACTOR SHALL BE RESPONSIBLE FOR PROVIDING EQUIPMENT THAT WILL FIT IN THE SPACE ALLOTTED.
9. THE LOCATION OF UTILITIES AND STRUCTURES, BOTH SURFACE AND SUBSURFACE, ARE SHOWN ON THE PLANS FROM DATA AVAILABLE AT THE TIME OF THE SURVEY AND ARE NOT NECESSARILY COMPLETE OR CORRECT. THE EXACT LOCATION AND PROTECTION OF UTILITIES AND STRUCTURES IS THE RESPONSIBILITY OF THE CONTRACTOR. DURING CONSTRUCTION THE CONTRACTOR SHALL USE DILIGENCE TO PROTECT ALL EXISTING UTILITIES AND STRUCTURES WHETHER SHOWN ON THE PLANS OR NOT. IF DAMAGE IS CAUSED, THE CONTRACTOR SHALL BE RESPONSIBLE FOR REPAIR AND RESTORATION OF SAME IN ACCORDANCE WITH THE DIRECTIONS OF THE ENGINEER AND FOR ANY RESULTING CONTINGENT DAMAGES.
10. BEFORE WORKING WITH OR AROUND EXISTING UTILITIES, THE APPLICABLE UTILITY COMPANY SHALL BE CONTACTED BY THE CONTRACTOR.
11. POWER, INSTRUMENTATION AND CONTROL WIRING SHALL BE INSTALLED IN SEPARATE CONDUITS. SHIELDED CONDUCTORS SHALL NOT BE INSTALLED IN THE SAME CONDUIT AS ANY UNSHIELDED CONDUCTORS.
12. REMOVE ALL UNUSED CONDUIT AND WIRE BACK TO SOURCE ASSOCIATED WITH EQUIPMENT BEING REMOVED OR RELOCATED. CONCEALED CONDUIT BELOW FLOOR OR UNDERGROUND MAY REMAIN IN PLACE.
13. CONDUIT RUNS SHALL BE ROUTED TO AVOID, AND NEVER RUN BELOW, STEAM, WATER OR OTHER PIPE WHICH MAY HAVE AN ADVERSE EFFECT DUE TO HEAT OR LEAKS. WHERE CONDUIT PARALLELS OR CROSSES SUCH PIPES, A MINIMUM SEPARATION OF 12 INCHES SHALL BE MAINTAINED.
14. LIQUID-TIGHT FLEXIBLE CONDUIT (MAXIMUM OF 24") SHALL BE USED IN CONNECTING MOTORS, SENSING ELEMENTS, INSTRUMENTS, SOLENOID VALVES, OR ANY OTHER DEVICE WHICH TRANSMIT VIBRATION OR NOISE, REQUIRE MOVEMENT FOR ADJUSTMENT, OR REQUIRE REMOVAL FOR MAINTENANCE. MINIMUM SIZE OF FLEXIBLE CONDUIT SHALL BE 1/2".
15. JUNCTION BOXES, CABINETS, SWITCHES AND OTHER ELECTRICAL EQUIPMENT SHALL BE SOLIDLY ATTACHED PRIOR TO INSTALLATION OF CONDUIT.
16. CONDUIT, PULL BOXES, CABINETS, ETC. SHALL FORM A CONTINUOUS CONDUCTIVE GROUND SYSTEM. AT TRANSITIONS AND BREAKS, CONDUIT SHALL BE BONDED.
17. CONDUIT SHALL NOT BE FASTENED TO OTHER EQUIPMENT OR SO INSTALLED AS TO PREVENT THE READY REMOVAL OF OTHER EQUIPMENT FOR REPAIRS. INSTALLATION OF CONDUITS MUST NOT INTERFERE WITH ACCESS WAYS OR LADDERS.
18. ONLY PULLBOXES SPECIFICALLY REQUIRED BY THE ENGINEER IN LOCATIONS SHOWN ARE IDENTIFIED. CONTRACTOR SHALL PROVIDE ALL PULLBOXES REQUIRED TO MEET APPLICABLE CODES.
19. WIRING SHALL BE IDENTIFIED BY PERMANENT WIRE MARKERS AT EACH TERMINATION AND SHALL CORRESPOND WITH THE IDENTIFICATION NUMBERS ON THE DRAWINGS.
20. CONDUCTORS SHALL BE CONTINUOUS FROM POINT OF ORIGIN TO THE TERMINATION. NO CABLE SHALL BE SPLICED EXCEPT AS SHOWN ON THE DRAWINGS OR ON EXPLICIT INSTRUCTIONS OF THE OWNER.
21. TERMINALS ON TERMINAL BLOCKS SHALL BE PLAINLY AND PERMANENTLY MARKED TO CORRESPOND WITH THE IDENTIFICATION NUMBERS ON THE DIAGRAMS.
22. CONTRACTOR SHALL FURNISH JUNCTION BOXES, AND PULLBOXES AS REQUIRED. ALL INTERIOR JUNCTION BOXES AND PULLBOXES SHALL BE NEMA 12 ENCLOSURES UNLESS OTHERWISE INDICATED. ALL EXTERIOR JUNCTION BOXES AND PULLBOXES SHALL BE STAINLESS STEEL NEMA 4X ENCLOSURES UNLESS OTHERWISE INDICATED.
23. CONTRACTOR SHALL PROVIDE AND INSTALL ALL CABLES AND WIRE FROM CONTROL/INSTRUMENTATION DEVICES BACK TO ASSOCIATED CONTROL PANELS.
24. CONTRACTOR SHALL PROVIDE 20% SPARE CONTROL WIRES (MINIMUM OF 3 SPARES) FOR EACH CONTROL DEVICE. CAP SPARE WIRES AND LABEL AS SPARE.
25. FABRICATED BOXES 24 x 24 INCHES OR SMALLER SHALL BE MADE FROM 10 GAUGE STEEL SHEET.
26. FABRICATED BOXES LARGER THAN 24 x 24 INCHES SHALL BE MADE FROM 1/8" STEEL SHEET.
27. BOXES INSTALLED IN AN AREA DEFINED TO BE ACIDIC OR CAUSTIC SHALL BE MADE FROM TYPE 316 STAINLESS STEEL UNLESS INDICATED OTHERWISE ON THE DRAWINGS.
28. IN DRY AND/OR CLEAN AREAS CONDUIT ATTACHMENT TO BOXES SHALL BE MADE BY THE USE OF DOUBLE STEEL LOCK NUT (ONE OF WHICH SHALL BE OF THE BONDING TYPE) AND AN INSULATING BUSHING ON THE END OF EACH CONDUIT TERMINATION IN THE BOX.
29. IN WET AND/OR DUSTY AREAS AND EXTERIOR LOCATIONS, CONDUIT ATTACHMENT TO BOXES SHALL BE MADE WITH A WATERTIGHT CONDUIT HUB AS MANUFACTURED BY EFCOR CO. OR OWNER APPROVED EQUAL.
30. CONTRACTOR SHALL LEAVE SLACK IN ALL CABLE IN ALL BOXES.
31. CONTRACTOR SHALL FURNISH AND INSTALL BARRIERS IN BOXES AS REQUIRED OR CALLED FOR ON THE DRAWINGS. BARRIERS SHALL BE MADE FROM A MINIMUM OF 10 GAUGE STEEL SHEET AND HELD IN PLACE WITH CLIP ANGLES.
32. ALL BARRIERS SHALL BE INSTALLED IN BOXES UPON COMPLETION OF THE INSTALLATION OF CABLE AND SHALL BE REMOVABLE TO PERMIT FUTURE CABLE INSTALLATION.
33. ALL CABLES WITHIN BOXES SHALL BEAR A CABLE IDENTIFICATION TAG IN ACCORDANCE WITH THE SPECIFICATIONS.

SUGGESTED SEQUENCE OF CONSTRUCTION

THE FOLLOWING SEQUENCE IS PROVIDED AS ONE POSSIBLE SEQUENCE OF CONSTRUCTION THAT ALLOWS MINIMAL IMPACT ON THE OPERATIONS OF THE EXISTING FACILITY. CONTRACTOR SHALL SUBMIT A CONSTRUCTION SCHEDULE THAT INCLUDES THE ACTUAL CONSTRUCTION SEQUENCE FOR REVIEW BY THE ENGINEER AND THE OWNER FOR APPROVAL. SUBMITTAL SHALL INCLUDE DETAILS ON THE NUMBER OF POWER OUTAGES AND ANTICIPATED DURATION OF POWER OUTAGES. POWER OUTAGES SHALL BE PLANNED TO HAVE MINIMAL EFFECT ON OPERATIONS AND SHALL BE LIMITED TO THE SHORTEST DURATION POSSIBLE.

1. **###**

ELECTRICAL ABBREVIATIONS

A	AMPERES	IN	INCHES
AC	ABOVE COUNTER	KV	KILO-VOLT
AFF	ABOVE FINISHED FLOOR	KVA	KILO-VOLT AMPERES
ALUM	ALUMINUM	KW	KILOWATTS
ASPH	ASPHALT	LBS	POUNDS
CSDS	COMBINATION STARTER/DISC. SW.	MC	MECHANICAL CONTRACTOR
CKT	CIRCUIT	MCC	MOTOR CONTROL CENTER
CLG	CEILING	MLO	MAIN LUG ONLY
CONC	CONCRETE	MMS	MANUAL MOTOR STARTER
CONT	CONTINUED	MSWB	MAIN SWITCHBOARD
CSDS	COMBINATION STARTER/DISC. SW.	OC	OVERCURRENT
DDC	DIRECT DIGITAL CONTROL	P	POLE
DN	DOWN	PRI	PRIMARY
E	ELECTRIC	RGS	RIGID GALVANIZED STEEL
EC	ELECTRICAL CONTRACTOR	RPM	REVOLUTIONS PER MINUTE
EM	EMERGENCY	SE	SERVICE ENTRANCE
FDR	FEEDER	SEC	SECONDARY
FLA	FULL LOAD AMPERES	SS	STAINLESS STEEL
FLUOR	FLUORESCENT	T	TELEPHONE
FVNR	FULL VOLTAGE NON-REVERSING	UL	UNDERWRITER'S LABORATORY
FV2S	FULL VOLTAGE 2-SPEED	UPS	UNINTERRUPTIBLE POWER SUPPLY
G,GND	GROUND	V	VOLTS
GC	GENERAL CONTRACTOR	VA	VOLT AMPERES
GFI	GROUND FAULT INTERRUPTER	VFD	VARIABLE FREQUENCY DRIVE
HP	HORSEPOWER	W	WATTS
		WP	WEATHER PROOF

ClarkDietz
500 N. 3RD STREET
SUITE 200
WAUSAU, WI 54403
PHONE : 715.845.1333 www.clarkdietz.com

90% SUBMITTAL
NOT FOR CONSTRUCTION

PROJECT TITLE
CITY OF NEW BERLIN
WESTRIDGE LIFT STATION REHABILITATION
WAUKESHA COUNTY, WI

DESIGNED BY: DLT
DRAWN BY: IWD
CHECKED BY: TSW
DATE CHECKED: 11/23/21

DATE	REVISION
11/29/21	90% SET
09/30/21	50% SET

DRAWING TITLE
ELECTRICAL GENERAL NOTES, SYMBOLS, AND ABBREVIATIONS

PROJECT No.
N0430020

DRAWING No.
E-001

DWG 19 OF 31 DWGS

NOTE: DIMENSIONAL DATA IS NOT TO BE OBTAINED BY SCALING ANY PORTION OF THIS DRAWING.

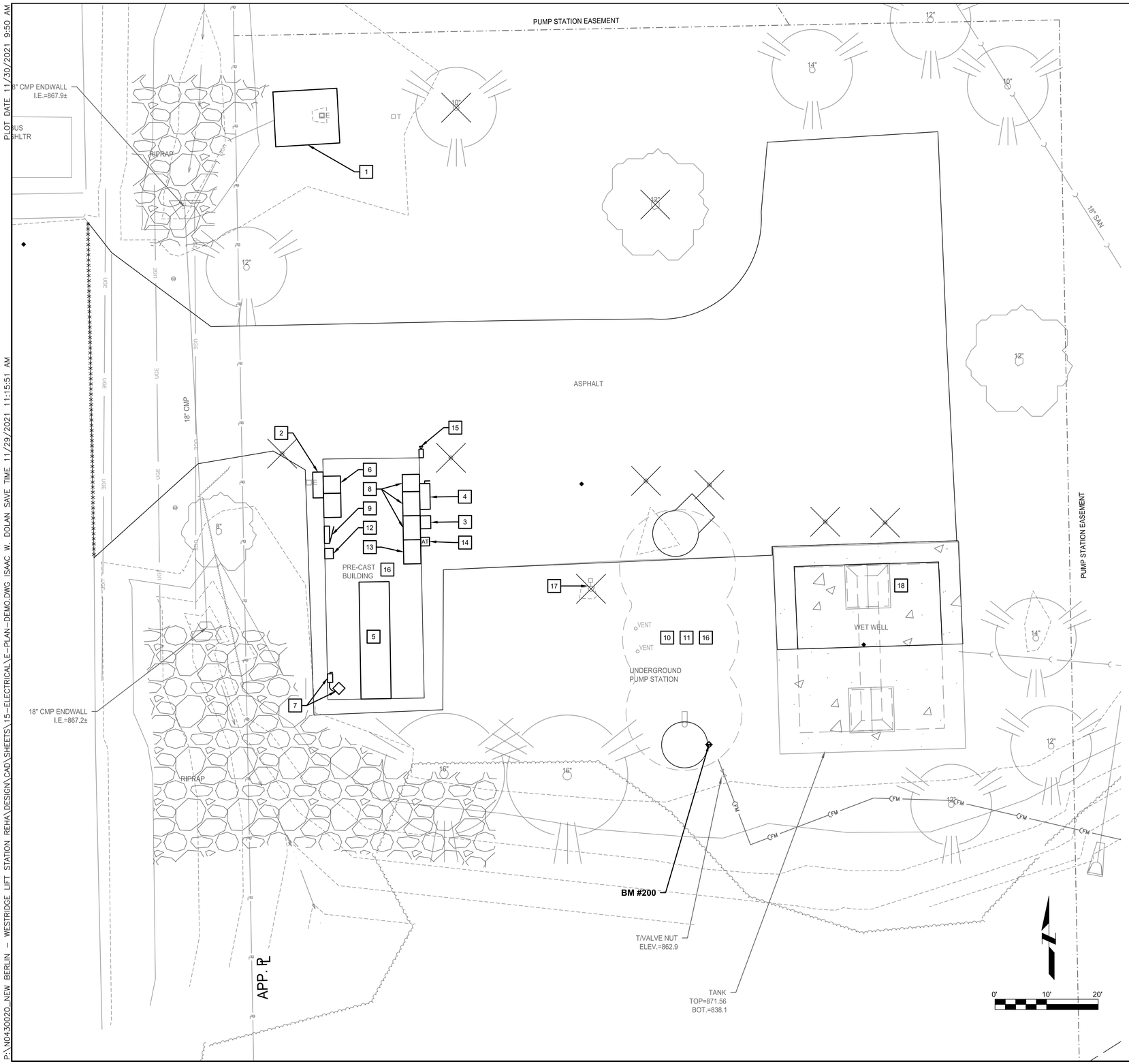

GENERAL NOTES

1. CONTRACTOR SHALL BE RESPONSIBLE FOR DISPOSAL OF ALL REMOVED EQUIPMENT, CONDUCTORS AND ANY ASSOCIATED DISPOSAL COSTS UNLESS OTHERWISE NOTED.

DEMO NOTES (THIS SHEET)

1. COORDINATE REMOVAL OF EXISTING ELECTRICAL SERVICE WITH WE ENERGIES. CONTRACTOR SHALL REMOVE EXISTING TRANSFORMER PAD, SECONDARY CONDUITS AND CONDUCTORS.
2. REMOVE EXISTING CT CABINET AND METER.
3. REMOVE EXISTING PORTABLE GENERATOR CONNECTION BOX.
4. REMOVE EXISTING MANUAL TRANSFER SWITCH/TWO POSITION DISCONNECT SWITCH.
5. CAREFULLY DISCONNECT EXISTING DIESEL GENERATOR AND GENERATOR ACCESSORIES. GENERATOR AND ACCESSORIES SHALL BE SALVAGED TO THE OWNER. CONTRACTOR SHALL PROVIDE CRANE AND TRANSPORTATION SERVICES AS REQUIRED FOR REMOVAL, LOADING AND UNLOADING OF CRANE AT OWNER'S REMOTE SITE. SPECIFIC LOCATION OF REMOTE SITE WITHIN THE CITY OF NEW BERLIN TO BE DETERMINED BY OWNER.
6. REMOVE EXISTING MOTOR CONTROL CENTER MCC-1.
7. REMOVE EXISTING UNIT HEATER AND ASSOCIATED DISCONNECT SWITCH.
8. REMOVE EXISTING MOTOR CONTROL CENTER MCC-2.
9. REMOVE EXISTING PANEL LP.
10. REMOVE EXISTING PUMP CHAMBER PANEL LOCATED IN UNDERGROUND PUMP STATION.
11. DISCONNECT PUMP MOTORS, QUANTITY OF 3, LOCATED IN UNDERGROUND PUMP STATION. SEE DEMOLITION ONE-LINE DIAGRAM FOR ADDITIONAL INFORMATION.
12. CAREFULLY DISCONNECT AND REMOVE EXISTING TELEMETRY PANEL. SALVAGE PANEL TO OWNER.
13. REMOVE EXISTING PUMP CONTROL PANEL.
14. CAREFULLY DISCONNECT AND REMOVE SCADA ANTENNA. SALVAGE ANTENNA TO OWNER.
15. CAREFULLY DISCONNECT AND REMOVE EXISTING SURVEILLANCE CAMERA. SALVAGE CAMERA, MOUNT AND BACK BOX TO OWNER.
16. CONTRACTOR SHALL BE RESPONSIBLE FOR DISPOSAL OF ALL REMAINING ELECTRICAL EQUIPMENT INCLUDING:
    - 16.1. FLUORESCENT LIGHT FIXTURES, LAMPS AND BALLASTS.
    - 16.2. HID LIGHT FIXTURES, LAMPS AND BALLASTS.
    - 16.3. CONDUIT AND WIRING.
    - 16.4. OTHER ELECTRICAL EQUIPMENT NOT SPECIFICALLY IDENTIFIED FOR OWNER SALVAGE.
17. REMOVE EXISTING LIGHT FIXTURE, POLE AND CONCRETE BASE.
18. REMOVE ALL CONTROL EQUIPMENT AND WIRING AT WET WELL.

ClarkDietz
500 N. 3RD STREET
SUITE 200
WAUSAU WI 54403
PHONE : 715.845.1333 www.clarkdietz.com

90% SUBMITTAL
NOT FOR CONSTRUCTION

PROJECT TITLE
CITY OF NEW BERLIN
WESTRIDGE LIFT STATION REHABILITATION
WAUKESHA COUNTY, WI

DESIGNED BY:	DLT
DRAWN BY:	IWD
CHECKED BY:	TSW
DATE CHECKED:	11/23/21

DATE	REVISION
11/29/21	90% SET
09/30/21	50% SET

DRAWING TITLE
ELECTRICAL SITE DEMOLITION PLAN

PROJECT No.
N0430020

DRAWING No.
E-101

DWG 20 OF 31 DWGS

P:\N0430020_NEW BERLIN - WESTRIDGE LIFT STATION REHA\DESIGN\CAD\SHEETS\15-ELECTRICAL\E-PLAN-DEMO.DWG ISAAC W. DOLAN SAVE TIME 11/29/2021 11:15:51 AM PLOT DATE 11/30/2021 9:50 AM

NOTE: DIMENSIONAL DATA IS NOT TO BE OBTAINED BY SCALING ANY PORTION OF THIS DRAWING.

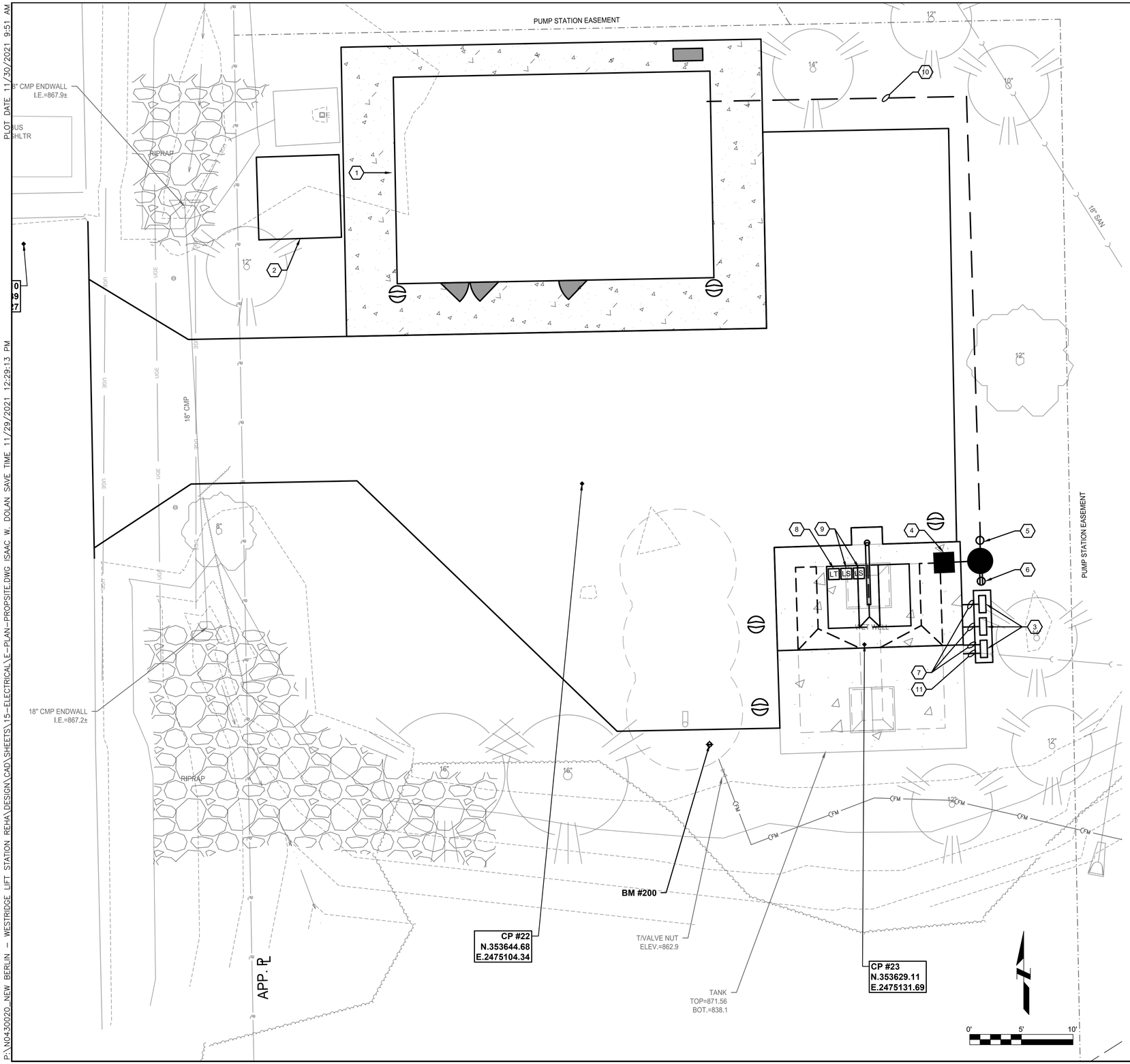

GENERAL NOTES

1. ALL WIRING, CONDUIT AND ELECTRICAL EQUIPMENT LOCATED IN THE WET WELL SHALL BE RATED FOR USE IN CLASS 1, DIVISION 1, GROUP D LOCATIONS PER THE NEC.
2. ALL CONDUITS BETWEEN THE WET WELL AND THE AIR GAP/ENCLOSURES SHALL BE PVC COATED RIGID METALLIC CONDUIT.
3. ALL OTHER CONDUITS SHALL BE PROVIDED AS IDENTIFIED IN SPECIFICATION 26 05 33.

KEYNOTES (THIS SHEET)

1. SEE CONTROL BUILDING PLAN FOR WORK INSIDE THE CONTROL BUILDING.
2. NEW WE ENERGIES PAD MOUNT TRANSFORMER. SEE ONE-LINE DIAGRAM.
3. PROVIDE AIR GAP/ENCLOSURES AS FOLLOWS. PROVIDE CONCRETE PAD FOR ANCHORING OF ENCLOSURE LEG KIT. SEE ONE-LINE DIAGRAM, INTERCONNECT DIAGRAM AND DETAIL:
   - 3.1. PUMP 1 AIR GAP/ENCLOSURE.
   - 3.2. PUMP 2 AIR GAP/ENCLOSURE.
   - 3.3. WET WELL CONTROLS AIR GAP/ENCLOSURE.
4. PROVIDE TYPE P LIGHT FIXTURE, POLE AND BASE. SEE FIXTURE SCHEDULE AND POLE BASE DETAIL.
5. PROVIDE PORTABLE PUMP RECEPTACLE. SURFACE MOUNT RECEPTACLE ON CONCRETE POLE BASE 24" ABOVE GRADE TO BOTTOM OF THE BOX.
6. PROVIDE GFCI PROTECTED DUPLEX CONVENIENCE RECEPTACLE WITH METALLIC IN USE COVER. SURFACE MOUNT RECEPTACLE ON CONCRETE POLE BASE 24" ABOVE GRADE TO BOTTOM OF BOX.
7. PROVIDE UNDERGROUND CONDUITS FROM AIR GAP/ENCLOSURES TO WET WELL. SEE ONE-LINE DIAGRAM AND INTERCONNECT DIAGRAM.
8. PROVIDE LEVEL TRANSDUCER. INSTALL MANUFACTURER PROVIDED CABLING IN CONDUIT DESCRIBED IN KEYNOTE 7. MAKE FINAL CONNECTIONS. PROVIDE STILLING WELL FOR LEVEL TRANSDUCER. STILLING WELL SHALL COMPRISE OF APPROPRIATELY SIZED PVC PIPING WITH DRILLED DRAIN HOLES BELOW THE LOW LEVEL WATER MARK. STILL WELL SHALL BE SUPPORTED TO THE WET WELL STRUCTURE WITH STAINLESS STEEL PIPE CLAMPS, SUPPORT CHANNEL AND HARDWARE AS REQUIRED.
9. INSTALL FLOAT SWITCHES AND SUPPORTING HARDWARE. INSTALL MANUFACTURER CABLING IN CONDUIT DESCRIBED IN KEYNOTE 7.
10. SINGLE LINE REPRESENTING MULTIPLE DIRECT BURIED UNDERGROUND CONDUITS. SEE DIRECT BURIED CONDUIT DETAIL. PROVIDE THE FOLLOWING:
    - 10.1. CONDUIT AND CONDUCTORS FROM VFD-1 TO PUMP 1 AIR GAP/ENCLOSURE. SEE ONE-LINE DIAGRAM.
    - 10.2. CONDUIT AND CONDUCTORS FROM VFD-2 TO PUMP 2 AIR GAP/ENCLOSURE. SEE ONE-LINE DIAGRAM.
    - 10.3. WET WELL CONTROLS CONDUITS FROM LIFT STATION CONTROL PANEL TO WET WELL CONTROLS AIR GAP/ENCLOSURE. SEE INTERCONNECT DIAGRAM.
    - 10.4. AIR MIXER AIR LINE CONDUIT FROM CONTROL BUILDING TO WET WELL CONTROLS AIR GAP/ENCLOSURE. SEE LIGHTING, POWER AND SYSTEMS PLAN FOR ADDITIONAL INFORMATION.
    - 10.5. 1" CONDUIT WITH 2 #10 PHASE CONDUCTORS AND 1 #10 EQUIPMENT GROUNDING CONDUCTOR FROM PANEL LP-1 TO TYPE P POLE FIXTURE.
    - 10.6. CONDUIT AND CONDUCTORS FROM MCC-2 TO PORTABLE PUMP RECEPTACLE. SEE ONE-LINE DIAGRAM.
    - 10.7. 1" CONDUIT WITH 2 #8 PHASE CONDUCTORS AND 1 #8 EQUIPMENT GROUNDING CONDUCTOR FROM PANEL LP-1 TO CONVENIENCE RECEPTACLE.
11. PROVIDE 1-1/2" CONDUIT FROM WET WELL CONTROLS AIR GAP/ENCLOSURE TO WET WELL FOR AIR MIXER AIR LINE INSTALLATION. SEE LIGHTING, POWER AND SYSTEMS PLAN FOR ADDITIONAL INFORMATION.

ClarkDietz
500 N. 3RD STREET
SUITE 200
WAUSAU, WI 54403
PHONE : 715.845.1333 www.clarkdietz.com

90% SUBMITTAL
NOT FOR CONSTRUCTION

PROJECT TITLE
CITY OF NEW BERLIN
WESTRIDGE LIFT STATION REHABILITATION
WAUKESHA COUNTY, WI

DESIGNED BY:	DLT
DRAWN BY:	IWD
CHECKED BY:	TSW
DATE CHECKED:	11/23/21

DATE	REVISION
11/29/21	90% SET
09/30/21	50% SET

DRAWING TITLE
ELECTRICAL SITE PLAN

PROJECT No.
N0430020

DRAWING No.
E-102

DWG 21 OF 31 DWGS

P:\N0430020_NEW BERLIN - WESTRIDGE LIFT STATION REHA\DESIGN\CAD\SHEETS\15-ELECTRICAL\E-PLAN-PROPSITE.DWG ISAAC W. DOLAN SAVE TIME 11/29/2021 12:29:13 PM PLOT DATE 11/30/2021 9:51 AM

NOTE: DIMENSIONAL DATA IS NOT TO BE OBTAINED BY SCALING ANY PORTION OF THIS DRAWING.

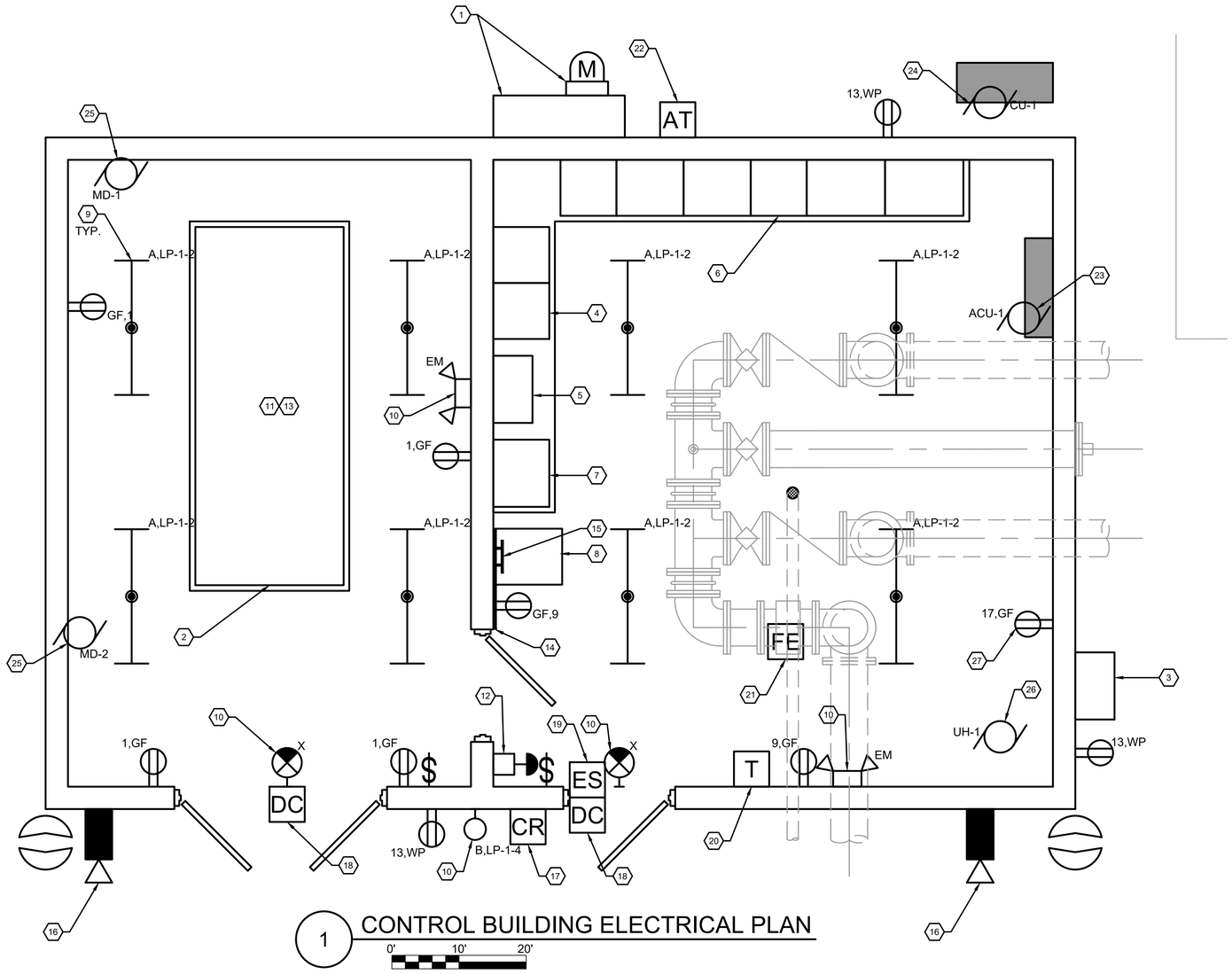

1 CONTROL BUILDING ELECTRICAL PLAN

GENERAL NOTES

1. ALL RECEPTACLES AND SWITCHES SHALL BE MOUNTED 48" ABOVE FINISHED FLOOR TO THE TOP OF THE BOX.
2. ALL BOXES AND CONDUIT SHALL BE ALLOWED TO BE SURFACE MOUNTED.
3. ALL EXIT AND EMERGENCY LIGHTING SHALL BE CONNECTED TO AN UNSWITCHED LEG OF THE LIGHTING CIRCUIT IN THAT AREA.

KEYNOTES (THIS SHEET)

1. PROVIDE TRANSOCKET AND METER BASE. SEE ONE-LINE DIAGRAM.
2. PROVIDE GENERATOR. SEE ONE-LINE DIAGRAM.
3. PROVIDE MANUAL TRANSFER SWITCH/PORTABLE GENERATOR CONNECTION MTS-1. SEE ONE-LINE DIAGRAM.
4. PROVIDE MOTOR CONTROL CENTER MCC-1. SEE ONE-LINE DIAGRAM.
5. PROVIDE AUTOMATIC TRANSFER SWITCH ATS-1. SEE ONE-LINE DIAGRAM. PROVIDE 3/4" CONDUIT WITH 2 #14, 1 #14G FROM ATS-1 TO THE GENERATOR CONTROL PANEL FOR GENERATOR START SIGNAL.
6. PROVIDE MOTOR CONTROL CENTER MCC-2. SEE ONE-LINE DIAGRAM.
7. PROVIDE LIFT STATION CONTROL PANEL LSCP-1. MAKE FINAL CONNECTIONS. SEE EQUIPMENT CONNECTION SCHEDULE AND INTERCONNECT DIAGRAM.
8. PROVIDE SECURITY PANEL SEC-1. MAKE FINAL CONNECTIONS. SEE EQUIPMENT CONNECTION SCHEDULE AND INTERCONNECT DIAGRAM.
9. SURFACE MOUNT LIGHT FIXTURE DIRECT TO CEILING.
10. WALL MOUNT LIGHT FIXTURE AT 9' ABOVE FINISHED FLOOR TO BOTTOM OF FIXTURE.
11. PROVIDE CONNECTIONS TO THE FOLLOWING GENERATOR ACCESSORIES. SEE EQUIPMENT CONNECTION SCHEDULE.
    - 11.1. BATTERY CHARGER BCH-1.
    - 11.2. ENGINE BLOCK HEATER EBH-1.
12. PROVIDE GENERATOR REMOTE EMERGENCY STOP BUTTON. PROVIDE 3/4" CONDUIT WITH 2 #14, 1 #14G FROM EMERGENCY STOP TO GENERATOR CONTROL PANEL. PROVIDE MONITORING CONDUIT AND CONDUCTORS. SEE INTERCONNECT DIAGRAM.
13. PROVIDE GENERATOR CONTROL PANEL MONITORING CONNECTIONS. SEE INTERCONNECT DIAGRAM.
14. PROVIDE TELECOMMUNICATIONS SERVICE ENTRANCE AS FOLLOWS:
    - 14.1. PROVIDE 3/4" x 36" x 96" PAINTED FIRE RATED PLYWOOD BACKBOARD MOUNTED TO BLOCK WALL.
    - 14.2. PROVIDE (2) 2" CONDUITS FROM BACKBOARD BELOW SLAB TO THE NORTH SIDE OF THE BUILDING FOR TELECOMMUNICATIONS SERVICE ENTRANCE.
15. PROVIDE MAIN GROUND BAR MGB. SEE GROUNDING DIAGRAM.
16. PROVIDE CAMERA. COORDINATE SPECIFIC HEIGHT AND LOCATION WITH CAMERA VENDOR. MAKE FINAL CONNECTIONS. SEE INTERCONNECT DIAGRAM.
17. PROVIDE CARD READER. MOUNT AT 48" ABOVE GRADE TO TOP OF THE BOX. MAKE FINAL CONNECTIONS. SEE INTERCONNECT DIAGRAM.
18. PROVIDE DOOR CONTACT. MAKE FINAL CONNECTIONS. SEE INTERCONNECT DIAGRAM.
19. PROVIDE ELECTRIC STRIKE. MAKE FINAL CONNECTIONS. SEE INTERCONNECT DIAGRAM.
20. PROVIDE ROOM TEMPERATURE SENSOR T-1. MAKE FINAL CONNECTIONS. SEE INTERCONNECT DIAGRAM.
21. PROVIDE FLOW METER FE-1. MAKE FINAL CONNECTIONS. SEE EQUIPMENT CONNECTION SCHEDULE AND INTERCONNECT DIAGRAM.
22. PROVIDE RADIO ANTENNA AT-2. MAKE FINAL CONNECTIONS. SEE INTERCONNECT DIAGRAM AND MOUNTING DETAIL.
23. ACU-1. MAKE FINAL CONNECTIONS. SEE EQUIPMENT CONNECTION SCHEDULE.
24. CU-1. MAKE FINAL CONNECTIONS. SEE EQUIPMENT CONNECTION SCHEDULE.
25. MOTORIZED DAMPERS MD-1 AND MD-2. MAKE FINAL CONNECTIONS. SEE EQUIPMENT CONNECTION SCHEDULE AND GENERATOR ROOM LOUVER CONTROL DIAGRAM.
26. UH-1. MAKE FINAL CONNECTIONS. SEE EQUIPMENT CONNECTION SCHEDULE.
27. PROVIDE RECEPTACLE FOR AIR MIXER PUMP. PROVIDE 1-1/2" CONDUIT FROM THE BUILDING TO THE WET WELL CONTROLS AIR GAP/ENCLOSURE FOR THE AIR MIXER AIR LINE.PROVIDE PULL STRING FROM WET WELL TO BUILDING FOR INSTALLATION OF AIR MIXER AIR LINE.

ClarkDietz
500 N. 3RD STREET
SUITE 200
WAUSAU WI 54403
PHONE : 715.845.1333 www.clarkdietz.com

90% SUBMITTAL
NOT FOR CONSTRUCTION

PROJECT TITLE
CITY OF NEW BERLIN
WESTRIDGE LIFT STATION REHABILITATION
WAUKESHA COUNTY, WI

DESIGNED BY:	DLT
DRAWN BY:	IWD
CHECKED BY:	TSW
DATE CHECKED:	11/23/21

DATE	REVISION
11/29/21	90% SET
09/30/21	50% SET

DRAWING TITLE
LIFT STATION LIGHTING, POWER, AND SYSTEMS PLAN

PROJECT No.
N0430020

DRAWING No.
E-103

DWG 22 OF 31 DWGS

PLOT DATE 11/30/2021 9:51 AM
P:\N0430020_NEW BERLIN - WESTRIDGE LIFT STATION REHA\DESIGN\CAD\SHEETS\15-ELECTRICAL\E-PLAN.DWG ISAAC W. DOLAN SAVE TIME 11/29/2021 12:59:58 PM
NOTE: DIMENSIONAL DATA IS NOT TO BE OBTAINED BY SCALING ANY PORTION OF THIS DRAWING.

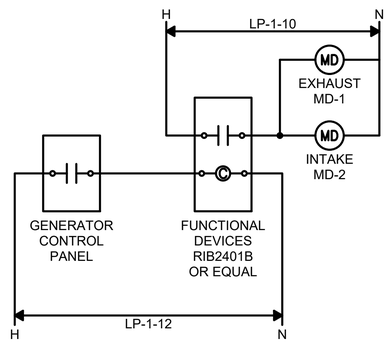

GENERATOR ROOM LOUVER CONTROL DETAIL

NOT TO SCALE

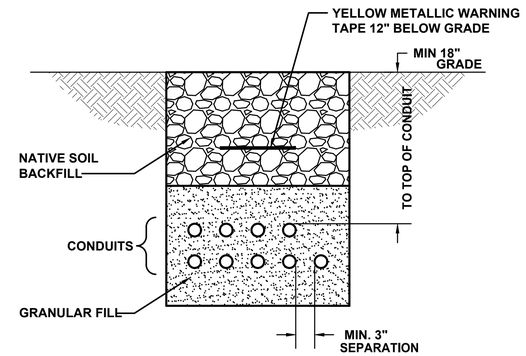

NOTES:

1. BACKFILL MATERIALS SHALL BE AS FOLLOWS:
   - 1.1. MINIMUM OF 3" SAND ON ALL SIDES OF CONDUITS.
   - 1.2. USE EXCAVATED AND RE-USED SUBSOIL (FREE OF CLUMPS LARGER THAN 3" AND DEBRIS) ON TOP OF SAND TO 6" BELOW GRADE.
   - 1.3. USE EXCAVATED AND RE-USED TOP SOIL (FREE OF ROOTS, ROCKS LARGER THAN 1/2", SUBSOIL, DEBRIS, LARGE WEEDS AND FOREIGN MATTER; SINGLE SCREENED) FROM 6" BELOW GRADE TO GRADE.
2. COMPACT UNIFORMLY TO 95 PERCENT OF MAXIMUM DENSITY.
3. PROVIDE THERMOPLASTIC SPACER SYSTEM LOCATED EVERY 5' FOR SUPPORT AND SPACING OF CONDUITS. SPACER SYSTEM SHALL BE CARLON SNAP-N-STAC COMBO SPACERS, OR EQUAL.

DIRECT BURIED CONDUIT DETAIL

NOT TO SCALE

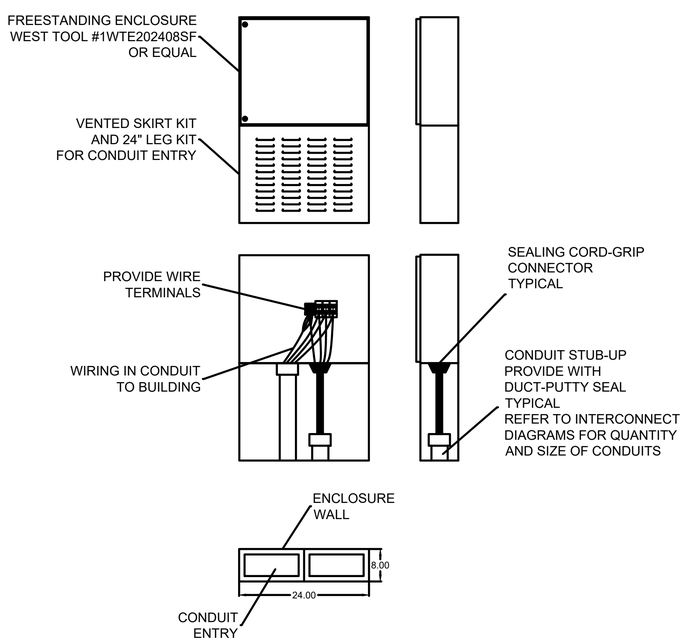

AIR GAP/ENCLOSURE DETAIL

NOT TO SCALE

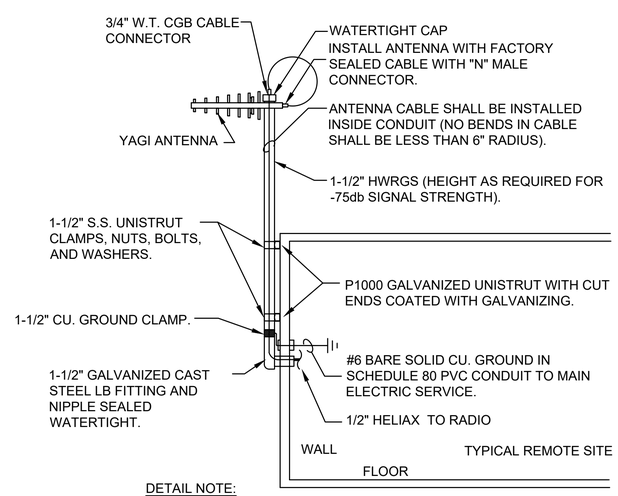

DETAIL NOTE:

ANTENNA MOUNTING STATION AT EACH SITE TO BE SELECTED BY SPREAD SPECTRUM RADIO SUPPLIER FOR OPTIMUM SIGNAL TRANSMISSION AND RECEIVING STRENGTH. A TOWER SHALL BE PROVIDED AND INSTALLED BY THIS CONTRACTOR WHEN THE ANTENNA IS HIGHER THAN 20 FEET FOR OPTIMUM SIGNAL STRENGTH (-75db OR LESS).

ANTENNA MOUNTING DETAIL

NOT TO SCALE

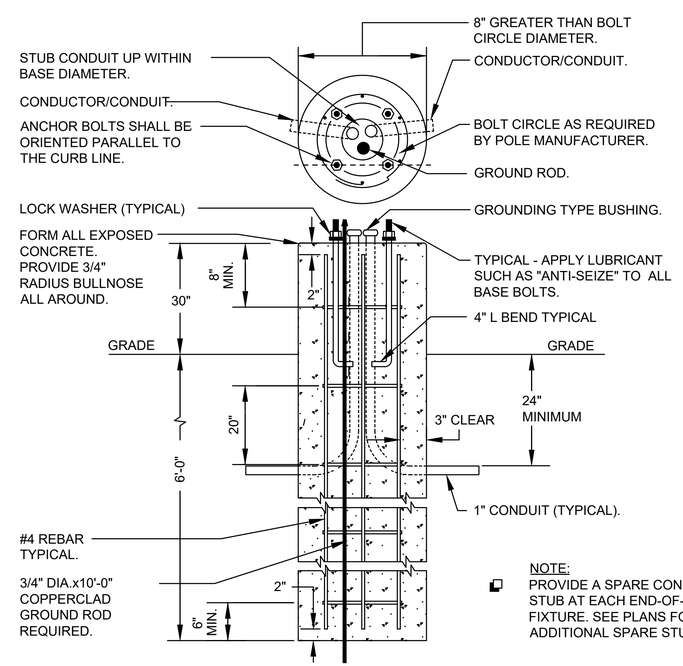

NOTE:
PROVIDE A SPARE CONDUIT STUB AT EACH END-OF-LINE FIXTURE. SEE PLANS FOR ADDITIONAL SPARE STUBS.

POLE BASE DETAIL

NOT TO SCALE

ClarkDietz
500 N. 3RD STREET
SUITE 200
WAUSAU, WI 54403
PHONE : 715.845.1333 www.clarkdietz.com

90% SUBMITTAL
NOT FOR CONSTRUCTION

PROJECT TITLE
CITY OF NEW BERLIN
WESTRIDGE LIFT STATION
REHABILITATION
WAUKESHA COUNTY, WI

DESIGNED BY:	DLT
DRAWN BY:	IWD
CHECKED BY:	TSW
DATE CHECKED:	11/23/21

DATE	REVISION
11/29/21	90% SET
09/30/21	50% SET

DRAWING TITLE
LIFT STATION ELECTRICAL
DETAILS

PROJECT No.
N0430020

DRAWING No.
E-501

DWG 23 OF 31 DWGS

NOTE: DIMENSIONAL DATA IS NOT TO BE OBTAINED BY SCALING ANY PORTION OF THIS DRAWING.

P:\N0430020_NEW BERLIN - WESTRIDGE LIFT STATION REHA\DESIGN\CAD\SHEETS\15-ELECTRICAL\E-DETAILS.DWG ISAAC W. DOLAN SAVE TIME 11/29/2021 11:17:27 AM PLOT DATE 11/30/2021 9:52 AM

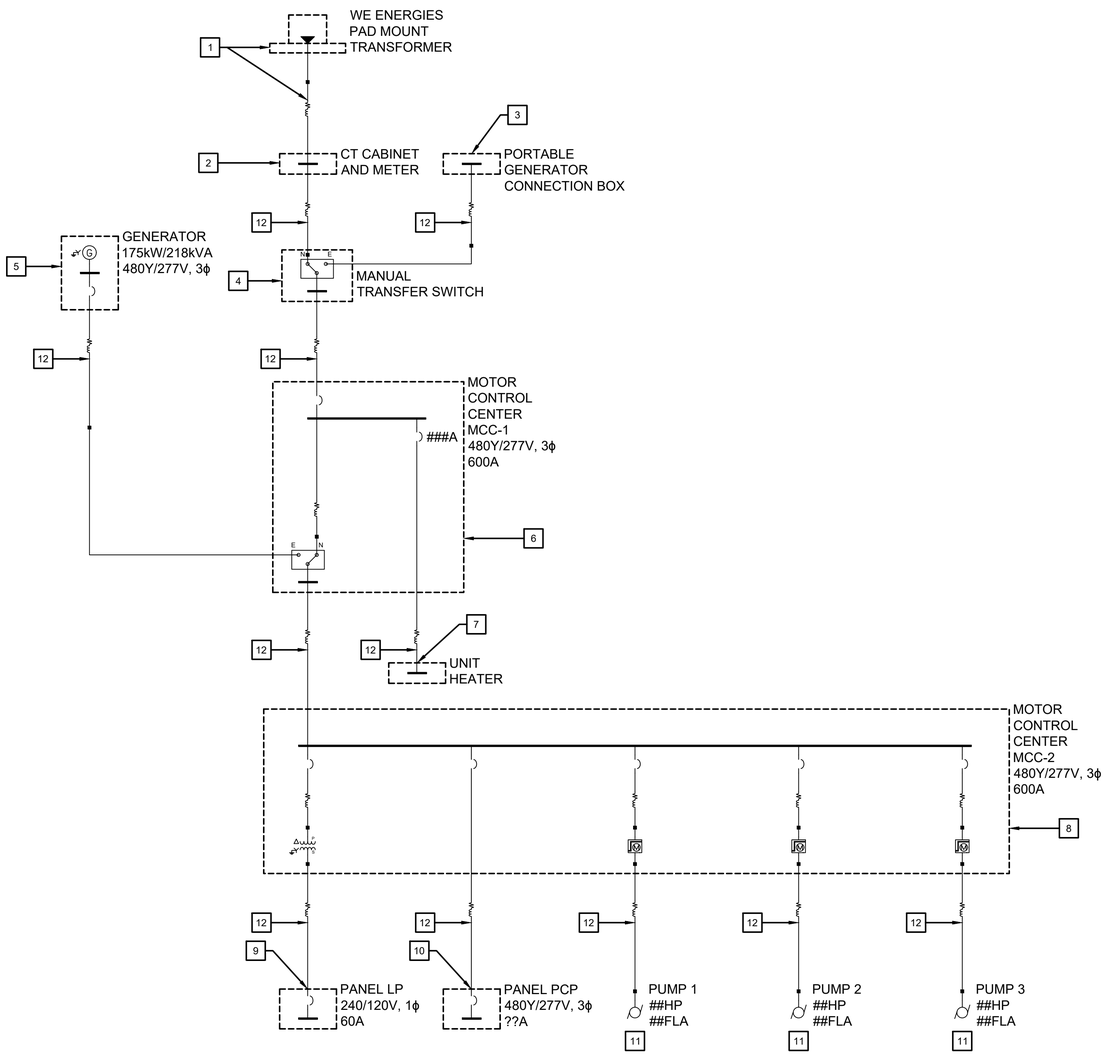

1 DEMOLITION ONE-LINE DIAGRAM

NOT TO SCALE

GENERAL NOTES

1. CONTRACTOR SHALL BE RESPONSIBLE FOR DISPOSAL OF ALL REMOVED EQUIPMENT, CONDUCTORS AND ANY ASSOCIATED DISPOSAL COSTS UNLESS OTHERWISE NOTED.

DEMO NOTES (THIS SHEET)

1. COORDINATE REMOVAL OF EXISTING ELECTRICAL SERVICE WITH WE ENERGIES. CONTRACTOR SHALL REMOVE EXISTING TRANSFORMER PAD, SECONDARY CONDUITS AND CONDUCTORS.
2. REMOVE EXISTING CT CABINET AND METER.
3. REMOVE EXISTING PORTABLE GENERATOR CONNECTION BOX.
4. REMOVE EXISTING MANUAL TRANSFER SWITCH/TWO POSITION DISCONNECT SWITCH.
5. CAREFULLY DISCONNECT EXISTING DIESEL GENERATOR AND GENERATOR ACCESSORIES. GENERATOR AND ACCESSORIES SHALL BE SALVAGED TO THE OWNER. CONTRACTOR SHALL PROVIDE CRANE AND TRANSPORTATION SERVICES AS REQUIRED FOR REMOVAL, LOADING AND UNLOADING OF CRANE AT OWNER'S REMOTE SITE. SPECIFIC LOCATION OF REMOTE SITE WITHIN THE CITY OF NEW BERLIN TO BE DETERMINED BY OWNER.
6. REMOVE EXISTING MOTOR CONTROL CENTER MCC-1.
7. REMOVE EXISTING UNIT HEATER.
8. REMOVE EXISTING MOTOR CONTROL CENTER MCC-2.
9. REMOVE EXISTING PANEL LP.
10. REMOVE EXISTING PUMP CHAMBER PANEL, LOCATED IN UNDERGROUND PUMP STATION.
11. DISCONNECT PUMP MOTOR LOCATED IN UNDERGROUND PUMP STATION.
12. REMOVE EXISTING CONDUIT AND CONDUCTORS.

ClarkDietz
500 N. 3RD STREET
SUITE 200
WAUSAU WI 54403
PHONE : 715.845.1333 www.clarkdietz.com

90% SUBMITTAL
NOT FOR CONSTRUCTION

PROJECT TITLE
CITY OF NEW BERLIN
WESTRIDGE LIFT STATION
REHABILITATION
WAUKESHA COUNTY, WI

DESIGNED BY: DLT
DRAWN BY: IWD
CHECKED BY: TSW
DATE CHECKED: 11/23/21

DATE	REVISION
11/29/21	90% SET
09/30/21	50% SET

DRAWING TITLE
DEMOLITION ONE-LINE DIAGRAM

PROJECT No.
N0430020

DRAWING No.
E-601

DWG 24 OF 31 DWGS

P:\N0430020_NEW BERLIN - WESTRIDGE LIFT STATION REHA\DESIGN\CAD\SHEETS\15-ELECTRICAL\DEMOLITION ONE-LINE DIAGRAM.DWG ISAAC W. DOLAN SAVE TIME 11/29/2021 11:16:49 AM PLOT DATE 11/30/2021 9:52 AM

NOTE: DIMENSIONAL DATA IS NOT TO BE OBTAINED BY SCALING ANY PORTION OF THIS DRAWING.

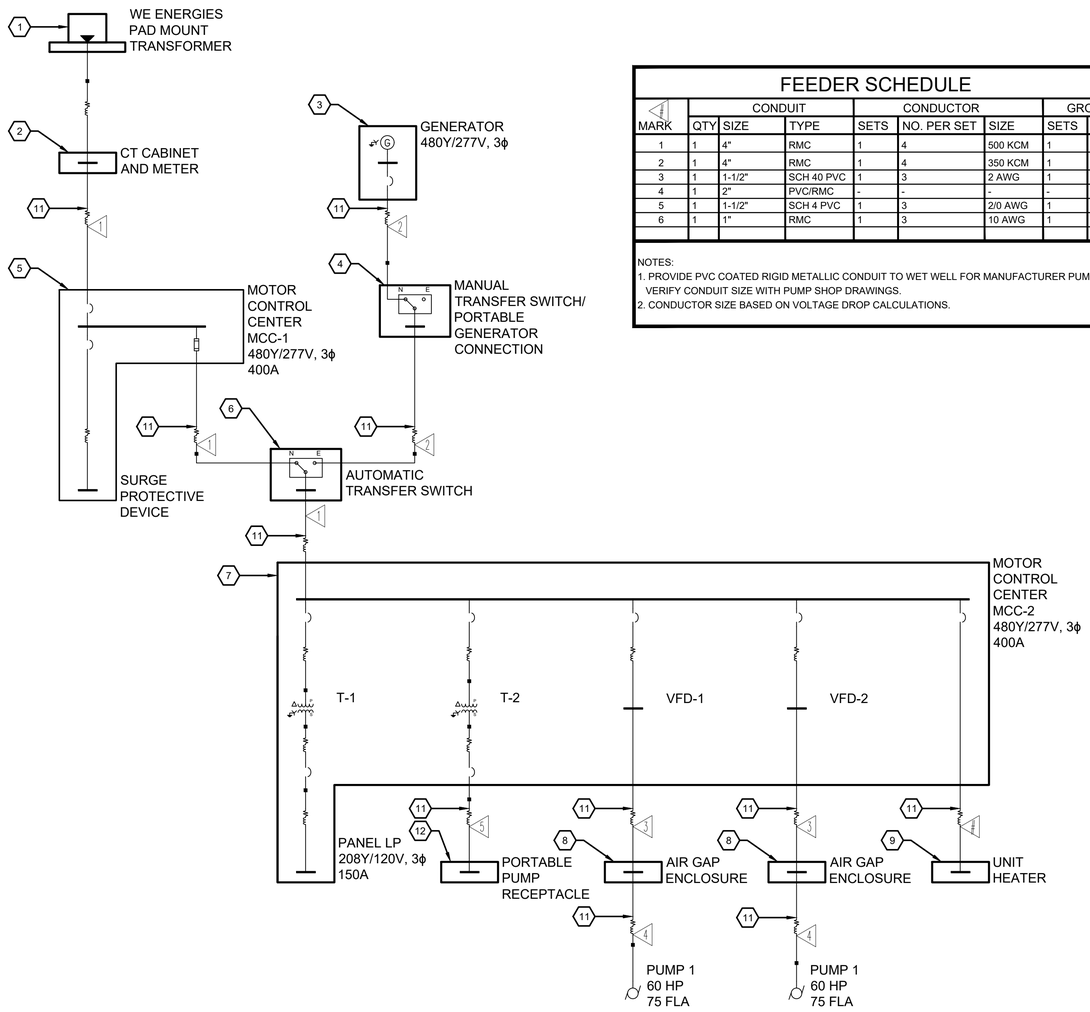

FEEDER SCHEDULE

MARK	CONDUIT QTY	CONDUIT SIZE	CONDUIT TYPE	CONDUCTOR SETS	CONDUCTOR NO. PER SET	CONDUCTOR SIZE	GROUND SETS	GROUND SIZE	NOTES
1	1	4"	RMC	1	4	500 KCM	1	3 AWG	
2	1	4"	RMC	1	4	350 KCM	1	4 AWG	
3	1	1-1/2"	SCH 40 PVC	1	3	2 AWG	1	6 AWG	
4	1	2"	PVC/RMC	-	-	-	-	-	1
5	1	1-1/2"	SCH 4 PVC	1	3	2/0 AWG	1	2 AWG	2
6	1	1"	RMC	1	3	10 AWG	1	10 AWG	

NOTES:
1. PROVIDE PVC COATED RIGID METALLIC CONDUIT TO WET WELL FOR MANUFACTURER PUMP CABLE. VERIFY CONDUIT SIZE WITH PUMP SHOP DRAWINGS.
2. CONDUCTOR SIZE BASED ON VOLTAGE DROP CALCULATIONS.

1 ONE-LINE DIAGRAM

NOT TO SCALE

GENERAL NOTES

1. SEE PLANS FOR EQUIPMENT LOCATIONS.

KEYNOTES (THIS SHEET)

1. COORDINATE INSTALLATION OF NEW PAD MOUNT TRANSFORMER WITH WE ENERGIES. TRANSFORMER, CONCRETE PAD, PRIMARY CONDUITS/CONDUCTORS AND SECONDARY CONDUITS/CONDUCTORS PROVIDED BY WE ENERGIES. SERVICE APPLICATION SHALL BE COMPLETED BY THE ENGINEER. ALL SERVICE FEES SHALL BE PAID BY THE OWNER.
2. PROVIDE WE ENERGIES APPROVED 480/277V, 400A TRANSOCKET AND METER BASE.
3. PROVIDE GENERATOR.
4. PROVIDE MANUAL TRANSFER SWITCH/PORTABLE GENERATOR CONNECTION.
5. PROVIDE MOTOR CONTROL CENTER MCC-1. SEE SCHEDULE AND ELEVATION.
6. PROVIDE AUTOMATIC TRANSFER SWITCH.
7. PROVIDE MOTOR CONTROL CENTER MCC-2. SEE SCHEDULE AND ELEVATION.
8. PROVIDE AIR GAP/ENCLOSURE FOR SPLICING OF SUBMERSIBLE PUMP CABLES WITH PUMP FEED CONDUCTORS. SEE DETAIL.
9. UNIT HEATER. MAKE FINAL CONNECTIONS.
10. NOT USED.
11. PROVIDE CONDUIT AND CONDUCTORS. SEE FEEDER SCHEDULE.
12. PROVIDE PORTABLE PUMP RECEPTACLE, 100 AMP, 600 VOLT, 3 PHASE, 3 WIRE PORTABLE 20HP PUMP RECEPTACLE. RECEPTACLE SHALL BE EATON/CROUSE HINDS APQ1037, STYLE 1, 3 POLE MOTOR PLUG WITH AJ57 BACK BOX, NO EQUAL.

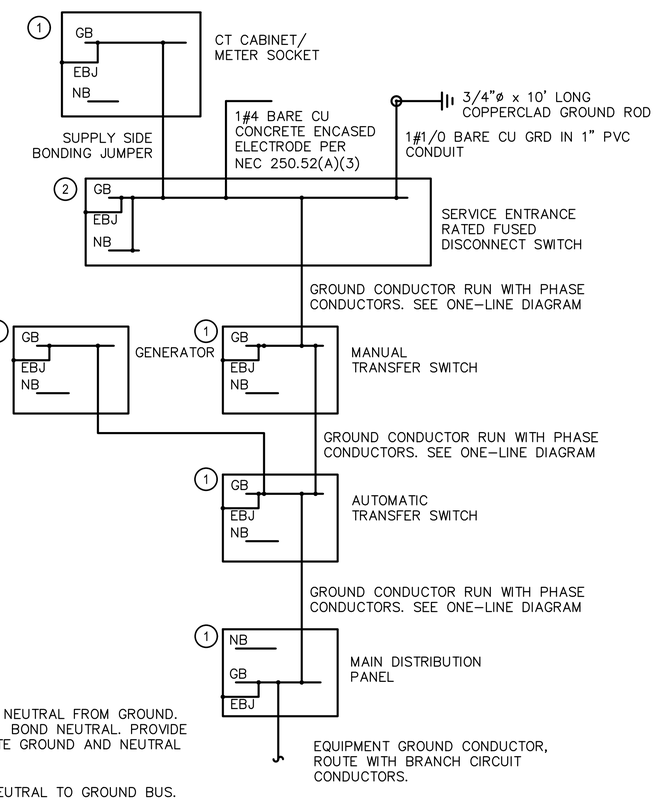

1. ISOLATE NEUTRAL FROM GROUND. DO NOT BOND NEUTRAL. PROVIDE SEPARATE GROUND AND NEUTRAL BUSES.
2. BOND NEUTRAL TO GROUND BUS.

2 GROUNDING DIAGRAM

NOT TO SCALE

ClarkDietz
500 N. 3RD STREET
SUITE 200
WAUSAU WI 54403
PHONE : 715.845.1333 www.clarkdietz.com

90% SUBMITTAL
NOT FOR CONSTRUCTION

PROJECT TITLE
CITY OF NEW BERLIN
WESTRIDGE LIFT STATION REHABILITATION
WAUKESHA COUNTY, WI

DESIGNED BY: DLT
DRAWN BY: IWD
CHECKED BY: TSW
DATE CHECKED: 11/23/21

DATE	REVISION
11/29/21	90% SET
09/30/21	50% SET

DRAWING TITLE
ONE-LINE DIAGRAM

PROJECT No.
N0430020

DRAWING No.
E-602

DWG 25 OF 31 DWGS

NOTE: DIMENSIONAL DATA IS NOT TO BE OBTAINED BY SCALING ANY PORTION OF THIS DRAWING.

PLOT DATE 11/30/2021 9:52 AM
P:\N0430020_NEW BERLIN - WESTRIDGE LIFT STATION REHA\DESIGN\CAD\SHEETS\15-ELECTRICAL\NEW ONE-LINE DIAGRAM.DWG ISAAC W. DOLAN SAVE TIME 11/29/2021 11:18:30 AM

MOTOR CONTROL CENTER MCC-1

PANEL: MCC-1
LOCATION: PIPING ROOM
FED FROM: CT CABINET

OC DEVICE TYPE: Breaker
DEVICE FAMILY: Bolt On

ENCLOSURE: NEMA 1
MOUNTING: Free Standing
VOLTAGE: 480/277

MAINS(A): BKR
WIRING: 3-Phase 4-Wire

CONTINUOUS(A): 400
BUS SC RATING(A) 42000
FAULT CURRENT(A): 20874

NO	DESCRIPTION	NOTES	HP	Max FLA	OC DEVICE TYPE	OC DEVICE AMPS	P	SIZE	STARTER TYPE	STARTER SP	AC	FEEDER/RACEWAY STANDARD DESC	%VD
1	MAIN	MAIN BREAKER		0	LSI	400	3		-	-	-		
2	SPD	SURGE PROTECTIVE DEV		0	TM	60	3		-	-	-		
3	BLANK	BLANK SPACE		0	-	0	3		-	-	-		
4	ATS	-		0	FUSE	400	3		-	-	-		
5	BLANK	BLANK SPACE		0	-	0	3		-	-	-		

ALL CONNECTED	KVA	MAX PH AMPS	* PHASE TOTALS	VA	AMPS	BUS TOTALS	KVA
TOTAL CONNECTED	0.00	0.0	* A-N	0.0	0.0	CONNECTED	120.32
TOTAL DEMAND	0.00	0.0	* B-N	0.0	0.0	DEMAND	120.32
TOTAL DESIGN	0.00	0.0	* C-N	0.0	0.0	DESIGN	135.36

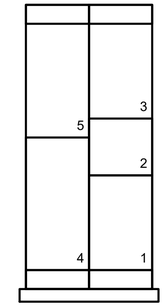

1 MCC-1 ELEVATION
NOT TO SCALE

MOTOR CONTROL CENTER MCC-2

PANEL: MCC-2
LOCATION: PIPING ROOM
FED FROM: ATS

OC DEVICE TYPE: Breaker
DEVICE FAMILY: Bolt On

ENCLOSURE: NEMA 1
MOUNTING: Free Standing
VOLTAGE: 480/277

MAINS(A): BKR
WIRING: 3-Phase 4-Wire

CONTINUOUS(A): 400
BUS SC RATING(A) 42000
FAULT CURRENT(A): 18781

NO	DESCRIPTION	NOTES	HP	Max FLA	OC DEVICE TYPE	OC DEVICE AMPS	P	SIZE	STARTER TYPE	STARTER SP	AC	FEEDER/RACEWAY STANDARD DESC	%VD
1	MAIN LUGS	MAIN LUGS		0	NONE	400	3		-	-	-		
2	T-1 PRIMARY	FEEDS T-1		0	TMCB	100	3		-	-	-		
3	T-2 PRIMARY	FEEDS T-2		0	TMCB	50	3		-	-	-		
4	UNIT HEATER	FEEDS UNIT HEATER		0	TMCB	30	3		-	-	-		
5	SPARE	SPARE		0	TMCB	30	3		-	-	-		
6	BLANK	SPACE ONLY		0	-	0	3		-	-	-		
7	T-1	SEE SCHEDULE		0	-	0	3		-	-	-		
8	BLANK	SPACE ONLY		0	-	0	3		-	-	-		
9	T-2	SEE SCHEDULE		0	-	0	3		-	-	-		
10	BLANK	SPACE ONLY		0	-	0	3		-	-	-		
11	BLANK	SPACE ONLY		0	-	0	3		-	-	-		
12	T-1 SEC	T-1 SECONDARY PROT		0	TMCB	150	3		-	-	-		
13	T-2 SEC	T-2 SECONDARY PROT		0	TMCB	100	3		-	-	-		
14	PANEL LP-1	SEE SCHEDULE		0	MLO	225	3		-	-	-		
15	VFD-1	SEE SCHEDULE		0	FUSE	100	3		-	-	-		
16	VFD-2	SEE SCHEDULE		0	FUSE	100	3		-	-	-		

ALL CONNECTED	KVA	MAX PH AMPS	* PHASE TOTALS	VA	AMPS	BUS TOTALS	KVA
TOTAL CONNECTED	0.00	0.0	* A-N	0.0	0.0	CONNECTED	147.41
TOTAL DEMAND	0.00	0.0	* B-N	0.0	0.0	DEMAND	147.41
TOTAL DESIGN	0.00	0.0	* C-N	0.0	0.0	DESIGN	162.59

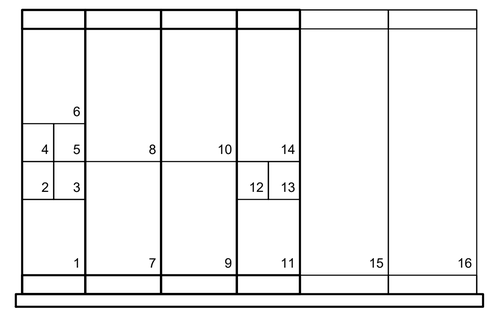

2 MCC-2 ELEVATION
NOT TO SCALE

PANELBOARD LP-1

PANEL: LP-1
LOCATION: MCC
FED FROM: T-1

OC DEVICE TYPE: Breaker
DEVICE FAMILY: Bolt On

ENCLOSURE: NEMA 1
MOUNTING: Flush
VOLTAGE: 208/120

MAINS(A): BKR
WIRING: 3-Phase 4-Wire

CONTINUOUS(A): 225
BUS SC RATING(A) 22000
FAULT CURRENT(A): 2318

OC AMPS	P	NOTES	DESCRIPTION	DEMAND CODE	VA	CKT	PHASE LOADS VA A	B	C	CKT	VA	DEMAND CODE	DESCRIPTION	NOTES	OC AMPS	P
20	1	NONE	GEN ROOM RECEPTS	GEN	720	1	1140			2	420	LTS	INDOOR LIGHTS	NONE	20	1
20	2	NONE	GEN BLOCK HEATER	GEN	2500	3		1381		4	160	LTS	OUTDOOR LIGHTS	NONE	20	1
"			"	GEN	-	5			2271	6	2288	GEN	CU-1	NONE	30	2
20	1	NONE	GEN BAT CHARGE	GEN	1201	7	2345			8	-		"		"	
20	1	NONE	PIPING ROOM RECEPTS	GEN	360	9		840		10	480	GEN	MD-1/MD-2	NONE	20	1
20	1	NONE	LSCP-1	GEN	1201	11			1441	12	240	GEN	GEN LOUVER CONTROL	NONE	20	1
20	1	NONE	OUTDOOR RECEPTS	GEN	360	13	360			14	0	GEN	SPARE	NONE	20	1
20	1	NONE	SEC-1	GEN	600	15		600		16	0	GEN	SPARE	NONE	20	1
20	1	NONE	AIR MIXER RECEPT	GEN	456	17			456	18	0	GEN	SPARE	NONE	20	1
20	1	NONE	SPARE	GEN	0	19	0			20	0	GEN	SPARE	NONE	20	1
20	1	NONE	SPARE	GEN	0	21		0		22	0	GEN	SPARE	NONE	20	1
20	1	NONE	SPARE	GEN	0	23			0	24	0	GEN	SPARE	NONE	20	1
20	1	NONE	SPARE	GEN	0	25	0			26	0	GEN	SPARE	NONE	20	1
20	1	NONE	SPARE	GEN	0	27		0		28	0	GEN	SPARE	NONE	20	1
20	1	NONE	SPARE	GEN	0	29			0	30	0	GEN	SPARE	NONE	20	1

ALL CONNECTED	KVA	MAX PH AMPS	* PHASE TOTALS	VA	AMPS	BUS TOTALS	KVA
TOTAL CONNECTED	10.59	34.2	* A-N	3844.9	32.0	CONNECTED	10.59
TOTAL DEMAND	10.59	34.2	* B-N	2706.8	22.5	DEMAND	10.59
TOTAL DESIGN	10.74	34.2	* C-N	4110.4	34.2	DESIGN	10.74

ClarkDietz
500 N. 3RD STREET
SUITE 200
WAUSAU WI 54403
PHONE : 715.845.1333 www.clarkdietz.com

90% SUBMITTAL
NOT FOR CONSTRUCTION

PROJECT TITLE
CITY OF NEW BERLIN
WESTRIDGE LIFT STATION
REHABILITATION
WAUKESHA COUNTY, WI

DESIGNED BY: DLT
DRAWN BY: IWD
CHECKED BY: TSW
DATE CHECKED: 11/23/21

DATE	REVISION
11/29/21	90% SET
09/30/21	50% SET

DRAWING TITLE
ELECTRICAL SCHEDULES (1 OF 3)

PROJECT No.
N0430020

DRAWING No.
E-603

DWG 26 OF 31 DWGS

NOTE: DIMENSIONAL DATA IS NOT TO BE OBTAINED BY SCALING ANY PORTION OF THIS DRAWING.

PLOT DATE 11/30/2021 9:52 AM
P:\N0430020_NEW BERLIN - WESTRIDGE LIFT STATION REHA\DESIGN\CAD\SHEETS\15-ELECTRICAL\NEW ONE-LINE DIAGRAM.DWG ISAAC W. DOLAN SAVE TIME 11/29/2021 11:18:30 AM

DRY TYPE TRANSFORMER SCHEDULE

TAG	LOCATION	kVA	PHASE	HZ	PRIMARY WINDING TYPE	PRIMARY WINDING VOLTAGE	SECONDARY WINDING TYPE	SECONDARY WINDING VOLTAGE	NOTES
T-1	MCC-2	45	3	60	DELTA	480	WYE	208	1
T-2	MCC-2	30	3	60	DELTA	480	DELTA	240	1

NOTES:
1. SEE APPLICABLE SPECIFICATIONS FOR ADDITIONAL INFORMATION.

VFD SCHEDULE

MOTOR										VFD			
TAG	DESCRIPTION	LOCATION	VARIABLE TORQUE	CONSTANT TORQUE	HP	FLA	VOLT	PHASE	RPM	TAG	LOCATION	MINIMUM SCCR RATING	NOTE
PUMP 1	PUMP 1	WET WELL	X		60.0	75.0	480	3	1765	VFD-1	MCC-2	42,000	1,2,3,4
PUMP 2	PUMP 2	WET WELL	X		60.0	75.0	480	3	1765	VFD-2	MCC-2	42,000	1,2,3,4

VFD ACCESSORIES SCHEDULE

TAG	H.M.I	FUSED DISC. SW	BYPASS STARTER/ CONTACTOR	VFD/BYPASS SELECTOR SWITCH	RUN TIME METER	H/O/A SWITCH	RESET SWITCH	"RUNNING" PILOT LIGHT	"SEAL LEAK" PILOT LIGHT	"VFD FAULT" PILOT LIGHT	"BYPASS FAULT" PILOT LIGHT	INPUT REACTOR	OUTPUT REACTOR
VFD-1	X	X	X	X	X	X	X	X	X	X	X	X	
VFD-2	X	X	X	X	X	X	X	X	X	X	X	X	
0													
0													

VFD I/O SCHEDULE

OUTPUTS										INPUTS								
TAG	H/O/A IN HAND POSITION	H/O/A IN AUTO POSITION	IN VFD POSITION	IN BYPASS POSITION	MOTOR RUNNING	SPEED FEEDBACK	VFD FAULT	BYPASS FAULT	ENET	ENABLE	MOTOR OVERTEMP	HAND ON/OFF	HAND START	HAND STOP	REMOTE RESET	HAND SPEED COMMAND	AUTO START	AUTO SPEED COMMAND
VFD-1	X	X	X	X	X	X	X	X	X		X	X			X	X	X	X
VFD-2	X	X	X	X	X	X	X	X	X		X	X			X	X	X	X
0																		
0																		

NOTES:
1. VFD SHALL BE PROVIDED IN THE MCC OR IN A FREESTANDING ENCLOSURE WITH THE LISTED ACCESSORIES. ALL I/O SHALL BE WIRED TO TERMINAL BLOCKS INSIDE ENCLOSURE FOR CONNECTION TO FIELD WIRING BY CONTRACTOR.
2. INSTALL PUMP MONITORING MODULE FURNISHED WITH PUMP AT MCC SECTION/FREESTANDING ENCLOSURE.
3. PROVIDE SOLID STATE/CURRENT LIMITING MOTOR STARTER FOR BYPASS.
4. PROVIDE DV/DT FILTER.

LIGHTING FIXTURE SCHEDULE

LUMINAIRE			LAMPS			DRIVER					
TYPE	MANUFACTURER	CATALOG NUMBER	TYPE	CATALOG #	WATTS	TYPE	NO.	VOLT	MOUNT	DESCRIPTION	NOTES
A	LITHONIA	CSVT-L48-5000LM-MVOLT-40K-80CRI	LED	NA	42	DIM	1	120	SUSPENDED	4 FOOT LONG VAPORTITE	1
B	LITHONIA	WPX1-LED-P2-30K-MVOLT-PE-DDBXD	LED	NA	24	DIM	1	120	WALL	OUTDOOR WALL MOUNT DARK BRONZE COLOR 4000K COLOR TEMPERATURE WITH PHOTOCELL	1
EM	LITHONIA	INDL-SP640L-UVOLT-LTP-SDRT	LED	NA					SURFACE	EGRESS LIGHTING FIXTURE	1
P	LITHONIA	DSX1-LED-P3-30K-T5W-MVOLT-SPA-NLTAIR2-PIRH-DDBXD	LED	NA	102				POLE	AREA LIGHT WITH 20' ALUMINUM POLE PROVIDE REMOTE FOR ADJUSTING FIXTURE DIMMING/OCCUPANCY SENSOR	1
X	LITHONIA	WLTE-W-1-R-EL-SD	LED	NA					POLE	EXIT FIXTURE	1

GENERAL NOTES:
1. THE ABOVE SCHEDULE REFLECTS THE BASIS OF DESIGN. SUSBTITUTIONS ARE PERMITTED ASSUMING SUBSTITUTED FIXTURES HAVE EQUIVALENT SPECIFICATIONS. ALL SUBSTITUTIONS SHALL REQUIRE ENGINEER APPROVAL.

ClarkDietz
500 N. 3RD STREET
SUITE 700
WAUSAU, WI 54403
PHONE : 715.845.1333 www.clarkdietz.com

90% SUBMITTAL
NOT FOR CONSTRUCTION

PROJECT TITLE
CITY OF NEW BERLIN
WESTRIDGE LIFT STATION REHABILITATION
WAUKESHA COUNTY, WI

DESIGNED BY: DLT
DRAWN BY: IWD
CHECKED BY: TSW
DATE CHECKED: 11/23/21

DATE	REVISION
11/29/21	90% SET
09/30/21	50% SET

DRAWING TITLE
ELECTRICAL SCHEDULES (2 OF 3)

PROJECT No.
N0430020

DRAWING No.
E-604

DWG 27 OF 31 DWGS

NOTE: DIMENSIONAL DATA IS NOT TO BE OBTAINED BY SCALING ANY PORTION OF THIS DRAWING.

P:\N0430020_NEW BERLIN - WESTRIDGE LIFT STATION REHA\DESIGN\CAD\SHEETS\15-ELECTRICAL\NEW ONE-LINE DIAGRAM.DWG ISAAC W. DOLAN SAVE TIME 11/29/2021 11:18:30 AM PLOT DATE 11/30/2021 9:52 AM

EQUIPMENT CONNECTION SCHEDULE

EQUIPMENT		LOCATION	VOLTAGE	PHASE	LOAD				SOURCE	CONDUCTORS - AWG					CONDUIT		CONTROLLER		LOCAL DISCONNECT				
TAG	DESCRIPTION				HP	KW	KVA	FLA		SETS	QTY.	SIZE	GRND	TYPE	SIZE	TYPE	TYPE	ENCLOSURE	SWITCH SIZE	POLE	FUSE (AMP)	ENCLOSURE	NOTES
LSCP-1	LIFT STATION CONTROL PANEL	CONTROL ROOM	120	1	-	-	-	10.0	LP-1	1	2	12	12	THHN	3/4	RMC	-	-	-	-	-	-	
SEC-1	SECURITY PANEL	CONTROL ROOM	120	1	-	-	-	5.0	LP-1	1	2	12	12	THHN	3/4	RMC	-	-	-	-	-	-	1
BCH-1	GENERATOR BATTERY CHARGER	GENERATOR ROOM	120	1	-	-	-	10.0	LP-1	1	2	12	12	THHN	3/4	RMC	-	-	-	-	-	-	2
EBH-1	GENERATOR ENGINE BLOCK HEATER	GENERATOR ROOM	208	1	-	2.5	-	-	LP-1	1	2	10	10	THHN	3/4	RMC	-	-	-	-	-	-	3
ACU-1	WALL MOUNTED EVAPORATOR COOLING UNIT	CONTROL ROOM	208	1	-	-	-	1.0	CU-1	1	3	12	12	THHN	3/4	RMC	-	-	-	-	-	-	4
CU-1	AIR COOLED CONDENSING UNIT	EXTERIOR	208	1	-	-	-	11.0	LP-1	1	3	10	10	THHN	3/4	RMC	-	-	30	2	NF	3R	
MD-1	MOTORIZED DAMPER WALL LOUVER WL-1	GENERATOR ROOM	120	1	-	-	-	2.0	LP-1	1	2	12	12	THHN	3/4	RMC	-	-	-	-	-	-	5
MD-2	MOTORIZED DAMPER WALL LOUVER WL-2	GENERATOR ROOM	120	1	-	-	-	2.0	LP-1	1	2	12	12	THHN	3/4	RMC	-	-	-	-	-	-	5
UH-1	UNIT HEATER	CONTROL ROOM	480	3	-	3	-	-	MCC-2	-	-	-	-	-	-	-	-	-	-	-	-	-	6

NOTES

1 COORDINATE CONNECTION REQUIREMENTS WITH PANEL SUPPLIER.
2 PROVIDE SINGLE NEMA 5-20 RECEPTACLE. COORDINATE LOCATION WITH GENERATOR SHOP DRAWINGS.
3 PROVIDE SINGLE NEMA 6-20 RECEPTACLE. VERIFY CONNECTION REQUIREMENTS AND COORDINATE LOCATION WITH GENERATOR SHOP DRAWINGS.
4 INDOOR UNIT IS POWERED FROM OUTDOOR UNIT. VERIFY WIRING REQUIREMENTS WITH SHOP DRAWINGS.
5 SEE GENERATOR ROOM LOUVER CONTROL DIAGRAM.
6 SEE ONE-LINE DIAGRAM FOR CONDUIT AND CONDUCTOR REQUIREMENTS.

ClarkDietz
500 N. 3RD STREET
SUITE 200
WAUSAU, WI 54403
PHONE : 715.845.1333 www.clarkdietz.com

90% SUBMITTAL
NOT FOR CONSTRUCTION

PROJECT TITLE
CITY OF NEW BERLIN
WESTRIDGE LIFT STATION REHABILITATION
WAUKESHA COUNTY, WI

DESIGNED BY: DLT
DRAWN BY: IWD
CHECKED BY: TSW
DATE CHECKED: 11/23/21

DATE	REVISION
11/29/21	90% SET
09/30/21	50% SET

DRAWING TITLE
ELECTRICAL SCHEDULES (3 OF 3)

PROJECT No.
N0430020

DRAWING No.
E-605

DWG 28 OF 31 DWGS

P:\N0430020_NEW BERLIN - WESTRIDGE LIFT STATION REHA\DESIGN\CAD\SHEETS\15-ELECTRICAL\NEW ONE-LINE DIAGRAM.DWG ISAAC W. DOLAN SAVE TIME 11/29/2021 11:18:30 AM
PLOT DATE 11/30/2021 9:52 AM
NOTE: DIMENSIONAL DATA IS NOT TO BE OBTAINED BY SCALING ANY PORTION OF THIS DRAWING.

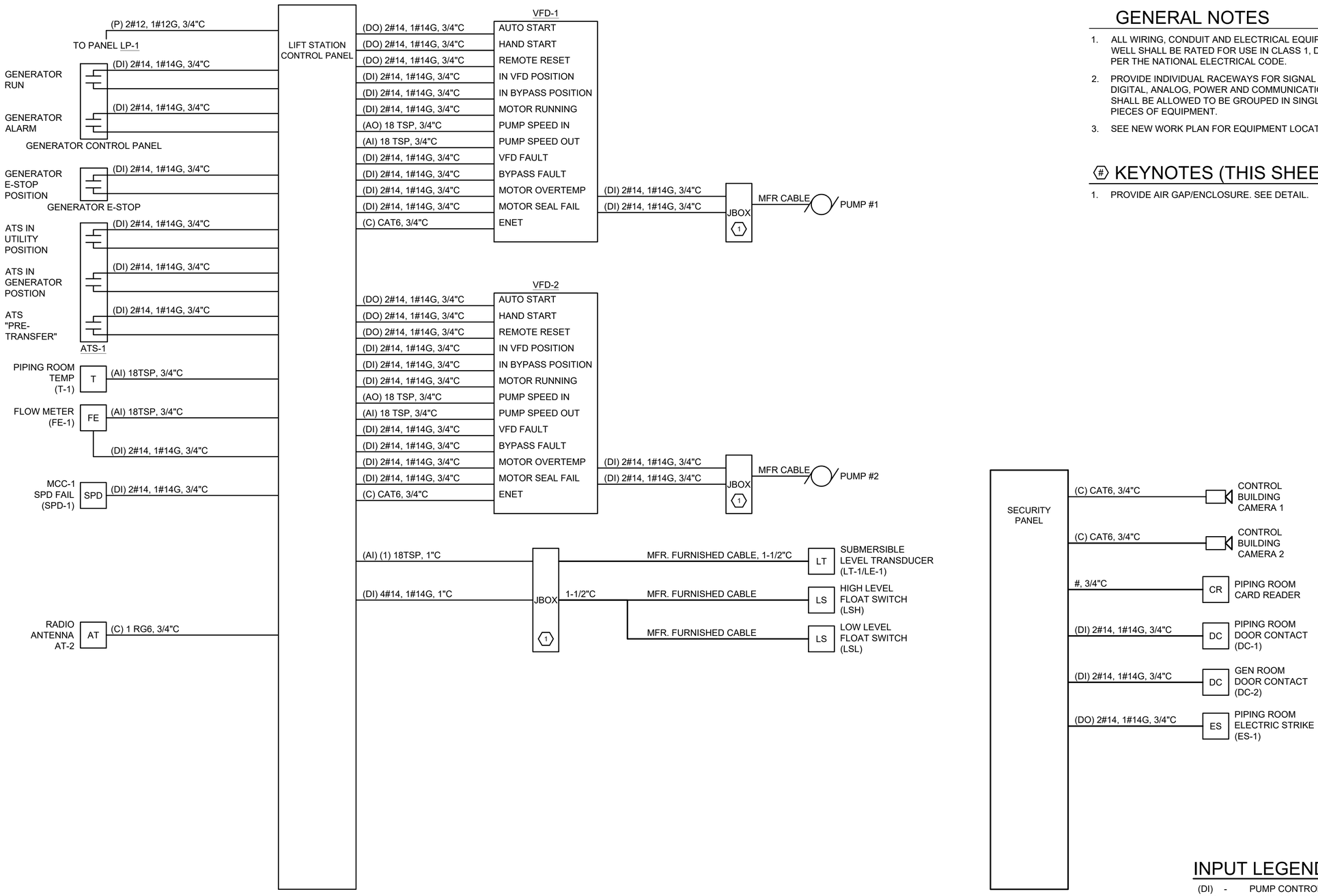

1 INTERCONNECT DIAGRAM

NOT TO SCALE

GENERAL NOTES

1. ALL WIRING, CONDUIT AND ELECTRICAL EQUIPMENT LOCATED IN THE WET WELL SHALL BE RATED FOR USE IN CLASS 1, DIV. 1, GROUP D LOCATIONS PER THE NATIONAL ELECTRICAL CODE.
2. PROVIDE INDIVIDUAL RACEWAYS FOR SIGNAL SEPARATION BETWEEN DIGITAL, ANALOG, POWER AND COMMUNICATION WIRING. LIKE SIGNALS SHALL BE ALLOWED TO BE GROUPED IN SINGLE CONDUITS TO INDIVIDUAL PIECES OF EQUIPMENT.
3. SEE NEW WORK PLAN FOR EQUIPMENT LOCATIONS.

KEYNOTES (THIS SHEET)

1. PROVIDE AIR GAP/ENCLOSURE. SEE DETAIL.

INPUT LEGEND (THIS DRAWING):

(DI) - PUMP CONTROL PANEL DIGITAL INPUT
(DO) - PUMP CONTROL PANEL DIGITAL OUTPUT
(AI) - PUMP CONTROL PANEL ANALOG INPUT
(AO) - PUMP CONTROL PANEL ANALOG OUTPUT
(P) - POWER WIRING
(C) - COMMUNICATION CABLING

ClarkDietz
500 N. 3RD STREET
SUITE 200
WAUSAU, WI 54403
PHONE : 715.845.1333 www.clarkdietz.com

90% SUBMITTAL
NOT FOR CONSTRUCTION

PROJECT TITLE
CITY OF NEW BERLIN
WESTRIDGE LIFT STATION REHABILITATION
WAUKESHA COUNTY, WI

DESIGNED BY: DLT
DRAWN BY: IWD
CHECKED BY: TSW
DATE CHECKED: 11/23/21

DATE	REVISION
11/29/21	90% SET
09/30/21	50% SET

DRAWING TITLE
INTERCONNECT DIAGRAM

PROJECT No.
N0430020

DRAWING No.
E-606

DWG 29 OF 31 DWGS

NOTE: DIMENSIONAL DATA IS NOT TO BE OBTAINED BY SCALING ANY PORTION OF THIS DRAWING.

P:\N0430020_NEW BERLIN - WESTRIDGE LIFT STATION REHA\DESIGN\CAD\SHEETS\15-ELECTRICAL\NEW ONE-LINE DIAGRAM.DWG ISAAC W. DOLAN SAVE TIME 11/29/2021 11:18:30 AM PLOT DATE 11/30/2021 9:52 AM

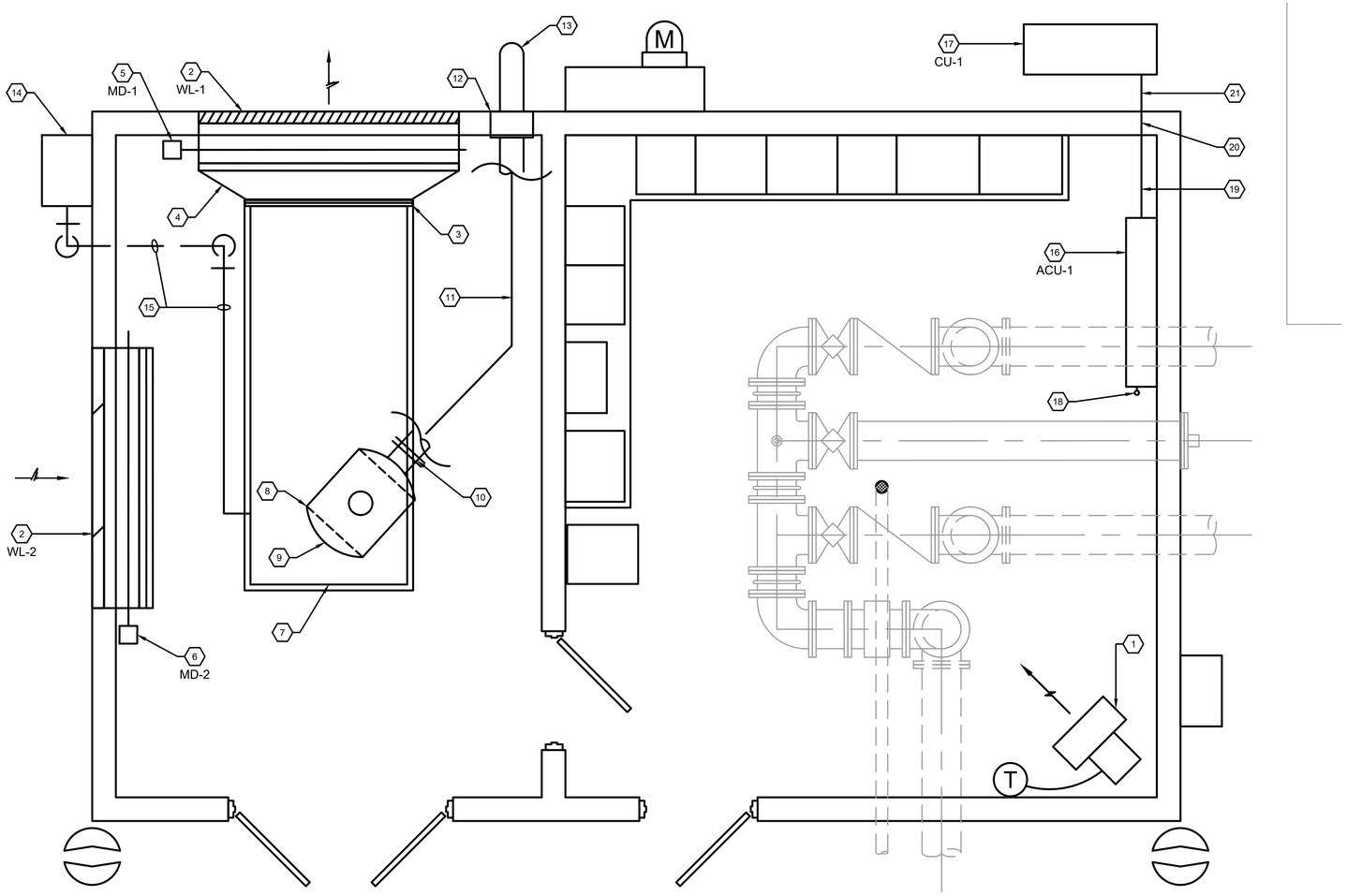

1 CONTROL BUILDING HVAC PLAN

0' 10' 20'

GENERAL NOTES

1. ALL RECEPTACLES AND SWITCHES SHALL BE MOUNTED 48" ABOVE FINISHED FLOOR TO THE TOP OF THE BOX.
2. ALL BOXES AND CONDUIT SHALL BE ALLOWED TO BE SURFACE MOUNTED.
3. ALL EXIT AND EMERGENCY LIGHTING SHALL BE CONNECTED TO AN UNSWITCHED LEG OF THE LIGHTING CIRCUIT IN THAT AREA.

KEYNOTES (THIS SHEET)

1. PROVIDE NEW ELECTRIC UNIT, INCLUDING MANUFACTURER'S HANGER BRACKET, WALL MOUNTED THERMOSTAT AND CONTROL WIRING. SEE SCHEDULE. ROUTE CONDUIT EXPOSED ON WALL.
2. WALL LOUVER. SEE SCHEDULE AND STRUCTURAL SHEETS.
3. DUCT CONNECTION TO GEN-SET RADIATOR +/- 60/50 WITH FLEXIBLE CONNECTIONS.
4. TRANSITION TO LOUVER SIZE.
5. MOTORIZED DAMPER. SEE SCHEDULE.
6. MOTORIZED DAMPER AND FILTER HOLDING FRAMES. SEE SCHEDULE.
7. GEN-SET WITH INTEGRAL RADIATOR. SEE ELECTRICAL DRAWINGS.
8. INSTALL ENGINE EXHAUST PIPE CONNECTION, COMPANION FLANGE AND FLEXIBLE CONNECTION FURNISHED BY GENERATOR MANUFACTURER. PROVIDE ENGINE EXHAUST FLANGED SPOOL PIECE AND MAKE CONNECTION TO FLEXIBLE CONNECTIONS AND SILENCER.
9. INSTALL SILENCER FURNISHED BY GENERATOR MANUFACTURER. SUSPEND FROM STRUCTURE ABOVE.
10. FLANGED CONNECTION TO SILENCER AND INCREASER TO 8" ENGINE EXHAUST.
11. 8" ENGINE EXHAUST EXPOSED AT CEILING.
12. PIPE THIMBLE THROUGH WALL.
13. EXTEND 2'-0" BEYOND ROOF OVERHANG AND TERMINATE WITH 45 DEGREE TAPERED OUTLET WITH S.S. 1/2" HARDWARE CLOTH BIRD SCREEN.
14. WE ENERGIES GAS METER. CONTRACTOR SHALL COORDINATE INSTALLATION OF NEW SERVICE WITH WE ENERGIES AND THE OWNER. WE ENERGIES FEES SHALL BE PAID FOR BY THE OWNER.
15. PROVIDE GAS PIPING TO CONNECT NATURAL GAS SERVICE TO NEW GENERATOR. SEE DETAIL.
16. PROVIDE NEW MINI SPLIT SYSTEM EVAPORATOR UNIT AND MOUNT ON WALL. COORDINATE EXACT LOCATION AND ELEVATION IN FIELD TO MAINTAIN MANUFACTURER'S REQUIRED CLEARANCES. ROUTE REFRIGERANT AND SUCTION LINES TO EXTERIOR OF BUILDING FROM UNIT.
17. PROVIDE NEW CONDENSING UNIT ON CONCRETE PAD. LOCATE IN ACCORDANCE WITH MANUFACTURER'S CLEARANCE REQUIREMENTS. SEE SCHEDULE.
18. 3/4" CONDENSATE DRAIN DOWN TO FLOOR.
19. REFRIGERANT PIPING AND POWER/CONTROL WIRING EXPOSED ON WALL.
20. PIPING AND WIRING THRU WALL.
21. PIPING EXPOSED ALONG WALL AT BUILDING EXTERIOR.

ClarkDietz
500 N. 3RD STREET
SUITE 200
WAUSAU WI 54403
PHONE : 715.845.1333 www.clarkdietz.com

90% SUBMITTAL
NOT FOR CONSTRUCTION

PROJECT TITLE
CITY OF NEW BERLIN
WESTRIDGE LIFT STATION REHABILITATION
WAUKESHA COUNTY, WI

DESIGNED BY:	DLT
DRAWN BY:	IWD
CHECKED BY:	TSW
DATE CHECKED:	11/23/21

DATE	REVISION
11/29/21	90% SET
09/30/21	50% SET

DRAWING TITLE
LIFT STATION HEATING, VENTILATION AND COOLING PLAN

PROJECT No.
N0430020

DRAWING No.
H-103

DWG 30 OF 31 DWGS

NOTE: DIMENSIONAL DATA IS NOT TO BE OBTAINED BY SCALING ANY PORTION OF THIS DRAWING.

P:\N0430020_NEW BERLIN - WESTRIDGE LIFT STATION REHA\DESIGN\CAD\SHEETS\15-ELECTRICAL\H-PLAN.DWG ISAAC W. DOLAN SAVE TIME 11/29/2021 1:00:01 PM PLOT DATE 11/30/2021 9:53 AM

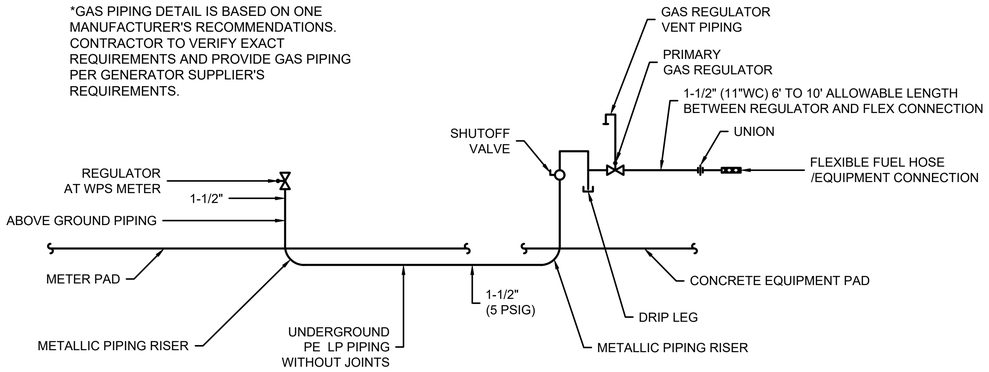

GENERATOR GAS PIPING DETAIL

NOT TO SCALE

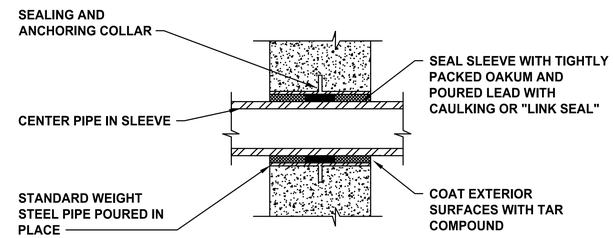

PIPE SLEEVE THRU EXTERIOR WALLS

NOT TO SCALE

LOUVER SCHEDULE

TAG	SERVICE / LOCATION	MATERIAL	TYPE	AIR VOL. (CFM)	SIZE (IN) W	SIZE (IN) H	SIZE (IN) D	MAX. VEL. (FPM)	FREE AREA (SQ. FT.)	NOTES	DESIGN BASIS MANUFACTURER	DESIGN BASIS MODEL NUMBER
WL-1	EXHAUST / GENERATOR	ALUMINUM	FLUSH	11,700	54	54	6	1201	9.74	1,3,4	GREENHECK	ELC6375DAX
WL-2	INTAKE / GENERATOR	ALUMINUM	FLUSH	12,150	60	54	6	1119	10.86	1,2,3	GREENHECK	ELC6375DAX

NOTES:
1. PROVIDE WITH MATCHING MOTORIZED DAMPER(S). PROVIDE MULTIPLE SECTIONS FOR LOUVERS AND DAMPERS AS REQUIRED BY SIZE.
2. PROVIDE WITH SHOP FABRICATED FILTER HOLDING FRAMES.
3. ANODIZED FINISH/COLOR TO BE SELECTED BY THE OWNER.
4. PROVIDE BIRDSCREEN.

UNIT HEATER SCHEDULE - ELECTRIC

TAG	LOCATION	AIRFLOW PATTERN	FAN DATA AIR VOL. (CFM)	FAN DATA THROW (FT.)	FAN DATA MOTOR AMPS	EAT/LAT (°F DB)	RATING (KW)	NO. OF STAGES	ELECTRIC DATA V	PH	HZ	FLA	MCA	MCOP (AMPS)	MOUNTING HEIGHT	NOTES	DESIGN BASIS MANUFACTURER	DESIGN BASIS MODEL NUMBER
UH-1	CONTROL ROOM	HORZ.	700	--	0.39	60/83	5	1	480	3	60	6.0	--	--	10'-0"	1, 2, 3	QMARK	QWD0543

NOTES:
1. PROVIDE WITH WALL MOUNTED THERMOSTAT, AND WALL BRACKET.
2. ACCEPTABLE MANUFACTURERS: BERKO, MARLEY, MODINE.
3. WASH-DOWN CORROSION RESISTANT.

WALL MOUNTED EVAPORATOR COOLING UNIT SCHEDULE

TAG	SERVICE / LOCATION	COOLING CAPACITY AIR VOL. (CFM)	COOLING CAPACITY TOTAL MBH	HUMIDIFIER	REHEAT	ELECTRIC DATA V	PH	HZ	MCA	MCOP (AMPS)	REMARKS	DESIGN BASIS MANUFACTURER	DESIGN BASIS MODEL NUMBER
ACU-1	CONTROL ROOM / CONTROL ROOM	425	18.0	NONE	NONE	208	1	60	1	15	NOTES 1,2	MITSUBISHI	TPKA0181HA70A

NOTES:
1. SEE REMOTE AIR COOLED CONDENSING UNIT SCHEDULE THIS SHEET FOR ASSOCIATED EQUIPMENT.
2. PROVIDE WIRED REMOTE CONTROLLER.

AIR COOLED CONDENSING UNIT SCHEDULE

TAG	SERVICE / LOCATION	AIR VOL. (CFM)	NO. CONDENSING FANS	NO. REFRIG. CIRCUITS	REFRIG. TYPE	ELECTRICAL DATA V	PH	HZ	MCA	MOCP	REMARKS	DESIGN BASIS MANUFACTURER	DESIGN BASIS MODEL NUMBER
CU-1	ACU-1 / EXTERIOR GRADE	1590	1	1	R-410A	208	1	60	11.0	28	NOTE 1,2	MITSUBISHI	TRUYA0181KA70NA

NOTES:
1. FURNISH WITH LOW AMBIENT CONTROLS DOWN TO -20°F DB AND PROVIDE WITH MANUFACTURER'S RECOMMENDED ACCESSORIES.
2. PROVIDE WITH MANUFACTURER'S WALL MOUNTING KIT.

ClarkDietz
500 N. 3RD STREET
SUITE 200
WAUSAU WI 54403
PHONE : 715.845.1333 www.clarkdietz.com

90% SUBMITTAL
NOT FOR CONSTRUCTION

PROJECT TITLE
CITY OF NEW BERLIN
WESTRIDGE LIFT STATION REHABILITATION
WAUKESHA COUNTY, WI

DESIGNED BY: DLT
DRAWN BY: IWD
CHECKED BY: TSW
DATE CHECKED: 11/23/21

DATE	REVISION
11/29/21	90% SET
09/30/21	50% SET

DRAWING TITLE
HVAC SCHEDULES AND DETAILS

PROJECT No.
N0430020

DRAWING No.
H-501

DWG ---- OF 31 DWGS

NOTE: DIMENSIONAL DATA IS NOT TO BE OBTAINED BY SCALING ANY PORTION OF THIS DRAWING.

P:\N0430020_NEW BERLIN - WESTRIDGE LIFT STATION REHA\DESIGN\CAD\SHEETS\15-ELECTRICAL\H-DETAILS.DWG ISAAC W. DOLAN SAVE TIME 11/30/2021 9:42:21 AM PLOT DATE 11/30/2021 9:53 AM